TEE ONE TOPICS

Number 18 October, 2002

Disclaimer

LOST

One of the stranger diversions I permit myself in retirement is wandering through the eBay pages on the Web. One snippet I picked up recently was the sale of a very early Silver Wraith Chassis number WHD 93 that had belonged to the founder of Penfold's Wines, one Penfold Highland. My Mother and her sisters actually knew him socially and as I recall found him to be a rather self

A testimony to the ghastly paint inflicted on body builders immediately after the war. The P100 headlights were Lucas' pride and joy but had to have sealed beam inserts inside them to comply with US rules.

centred flamboyant character. He apparently had produced a most elaborate autobiography which he presented to one of my Aunts who somewhat unimpressed, ran a hot skewer through the corner and hung the tome in the outhouse!

And of course one had to have the occasional seats which on this car must have been strictly for one's dwarf friends. They were used in the last Phantoms but at least there was a reasonable amount of room for installation.

At any rate he had taste in cars and apparently owned this Mulliner bodied Silver Wraith in the sedanca de ville style. The nearest attempt in recent times to emulate this body style has been on the Continental which provides for the front section of the roof to be removed and stowed in the boot/trunk. These old cars had a hideously ingenious mechanism which involved unlocking the roof at the front, opening a hatch at the rear of the front compartment and turning a window winder

Given that these cars were designed to be chaffeur driven, it now seems so preposterous that for the sake of fashion, you stuck your driver out in the weather, perhaps however he preferred it to putting up with the chatter from the rear seat.

type handle on the underside which retracted the curved side panels of the assembly. The now truncated panel could be slid back into the rear roof and the hatch closed.

I have actually played with a few of these but have often wondered about wind noise and/or the ingress of water not to mention maintenance and the protection, if any, afforded in the event of an accident. But it seems we can still organise complexity in these locations given the roof system on the Bentley Azure. Those of you who have witnessed these contrivances opening, shutting, flapping, erecting and subsiding would appreciate my lack of surprise at news that one example got out of kilter resulting in the entire assembly practically tearing itself apart. At least with the old Mulliner version you could stop if things appeared to be going awry!

Nothing remarkable about the engine room – straight out of a Mk VI Bentley with the exception of the carburetter. The Factory was still using two coils for insurance as well as two condensers on the distributor. And of course a mark of its Australian heritage is the oil bath air cleaner apparently with a bit more room around it than its common sister car the Silver Dawn. The latter under heavy load and with loose rear mounts could produce a very interesting light thump on sudden acceleration as the air cleaner hit the valance. Note the very early positioning of the radiator filler cap on top of the header tank later moved down to the left hand shoulder presumably to allow some expansion places for these dear old engines, which would rust up and boil on demand. One notable difference here was that the engine ran without a thermostat in the cooling system. To speed up the process a 'Calorstat' worked a complex system of levers to swivel the vertical grille slats and restrict the air flow through the radiator. As the water heated it opened the Calorstat located in the header tank and pushed the vanes open. If all failed you could pull a pin and realease the whole mechanism to open fully. I believe the real motivation for the installation was a nostalgic hangover from prewar practice and a suspicion of the new fangled thermostats! The one dividend however was improved appearance since with the grille 'closed' the bug riddled cooling core was very effectively concealed! One other piece of history in this picture is the oil filler cap. Probably for reasons of economy or parts supply problems in the dismal post-war period, the beautiful hatch-top oil filler used for so many years on previous engines was not used. The screw-in cap was good old bakelite and did the job but is the immediate clue to a very early engine. Fortunately as the sun came out in the fifties the dear old hatch top returned and has remained on the Factory cars to this day as far as I am aware.

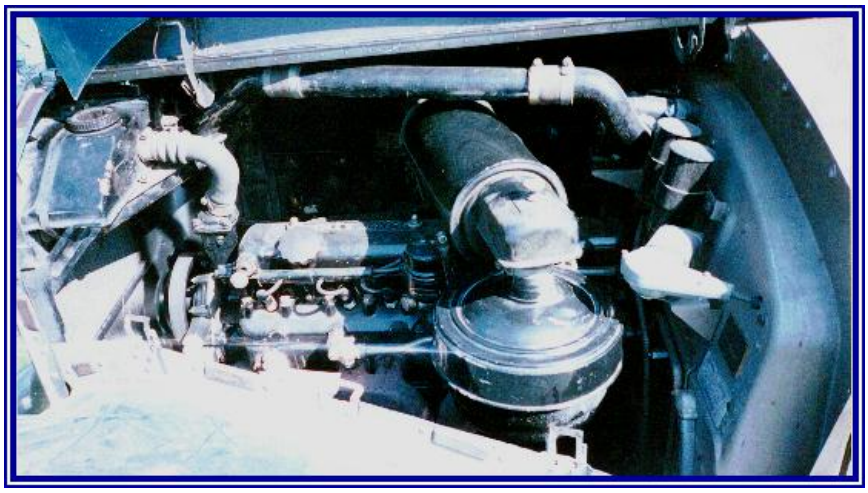

So Penfold's Wraith sits forlornly in the States awaiting a successful bidder. It was pulling $US30,000 and hadn't reached the reserve.

WHITHER WE GOEST?

It is a time of reckoning. Earlier this month I managed to push out to your mail boxes the 231st page of TEE ONE TOPICS which was started 17 months ago. At a guess I would say that the last 8 issues have been produced entirely at my own expense albeit very willingly. As I reflected in the last issue this whole exercise grew out of a perceived need to address the fairly straight forward problem of keeping Rolls-Royce and Bentley cars on the road at least on the Eastern seabord.. Casual readers of these columns will ask 'Well surely you as an owner follow the instructions in the car handbook and take the car to the'authorised dealer' this is a bit difficult in Canberra and points 400K West as you will appreciate.

Alternatively, you have saved your last cent to buy a Silver Shadow which goes but doesn't seem to measure up to your perceptions of how a Rolls-Royce should run. You take it to your dealer who is within at least a day's drive of your address and find that their estimate to correct the apparent problems will considerably surpass the price you paid for the car. If this was a Holden or a Ford the obvious answer would be a quick trip to the wreckers and one would be a lot wiser. It would be interesting to take a derelict Shadow to a wrecker and see how he reacted, most likely an offer at scrap metal level would be made and if he managed to find a buyer that would be a bonus.

Just in our local group we have some 5 cars that could fall into this category. Fortunately the owners have hung in there and bit by bit improved their vehicles. The knowledge to do this however seems to be the commodity that is in short supply. The Factory in the past has been helpful in advice but practical considerations weigh against detailed accounts or instructions. They also have the modern bugbear of liability about giving advice and the loyalty commercial considerations enforce to their dealers.

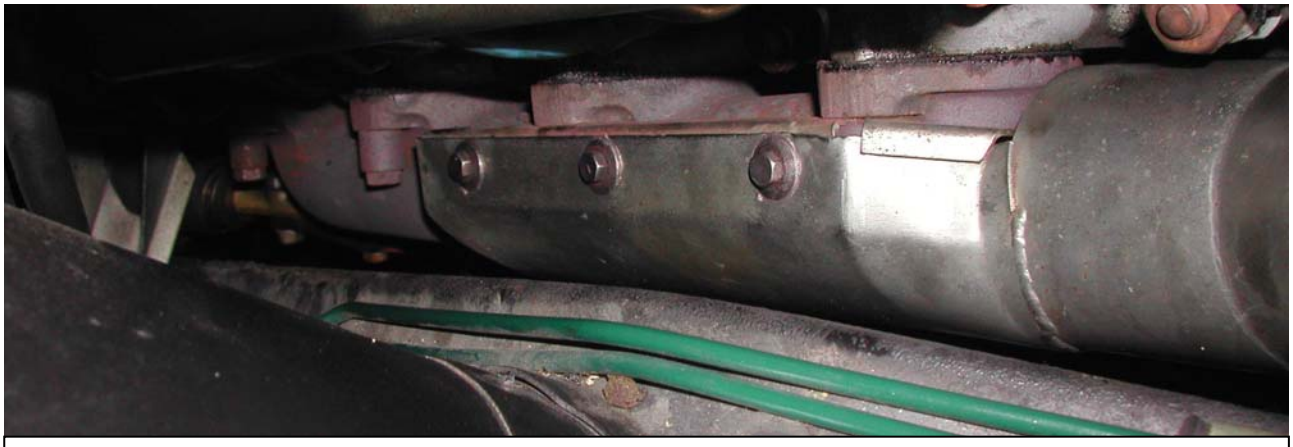

This very neat heat shield is fitted to the exhaust manifolds of Spirits and some earlier Shadows. The three 2BA setscrews are prime candidates for rusting in position. If you can get them out replace them with antiseize grease for the benefit of all.

And so the new owner joins the Club in the hope that if his gurtlewanger fails to gerflungle he can call or write to someone about the problem and seek practical advice. Unfortunately this has proven unrealistic. There are realitively few owners who have done significant work on their cars and even fewer who are prepared to share that knowledge and certainly very few who are prepared to share it in public writing. Some professional repairers are prepared to help with advice but the majority regard giving such advice as passing on trade secrets that would deny them business.

TEE ONE TOPICS attempts to make some contributions to this dearth of technical references and hopefully some people have found them of value. Interestingly, the Shadow Register in the Club seems to be the post war one actively disseminating practical knowledge on their cars. The Mk VI

Group are certainly providing references which is a good start but the remainder seem to have drawn a large blank. Apparently the pre-war fraternity are getting very organised particularly overseas and there is a growing communications network for owners of these cars to tap for information. The reckoning? Well I am now contributing to Praeclarvm so it may be that these efforts are superfluous. We'll see – any ideas?

STEERING BOXES AND TRANSFER CASES.

The Silver Cloud emerged from the Factory with a conventional manual steering box that sat comfortably beside either side of the engine depending where it was designed to be delivered. Eventually the Factory sorted out its own version of power steering and even that sat comfortably in the engine bay. But the advent of the vee eight engine sent the designers back to the drawing boards since although the new engine was lighter and shorter than the old six it was much fatter so the only space left for the steering box was below the toe board just above the starter motor. No longer could the axis of the box match that of the steering column since the rocker shaft which turns the Pitman arm (2 Figure above) which turn the front wheels had to be vertical.

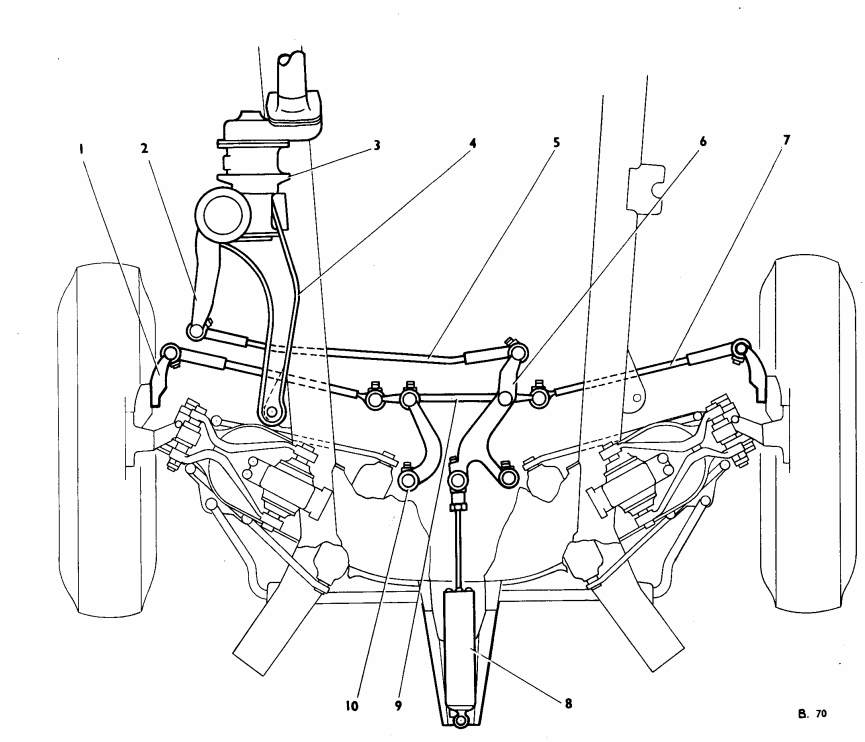

These days from the Shadow onwards this situation prevails and when the steering column shaft has to make a large turn manufacturers simply use universal joint/s. The latter however have their limits in angular deviation. Rolls-Royce decided to interpose a mechanical gearbox or transfer case to achieve the change in direction from the steering column. All very ingenious and

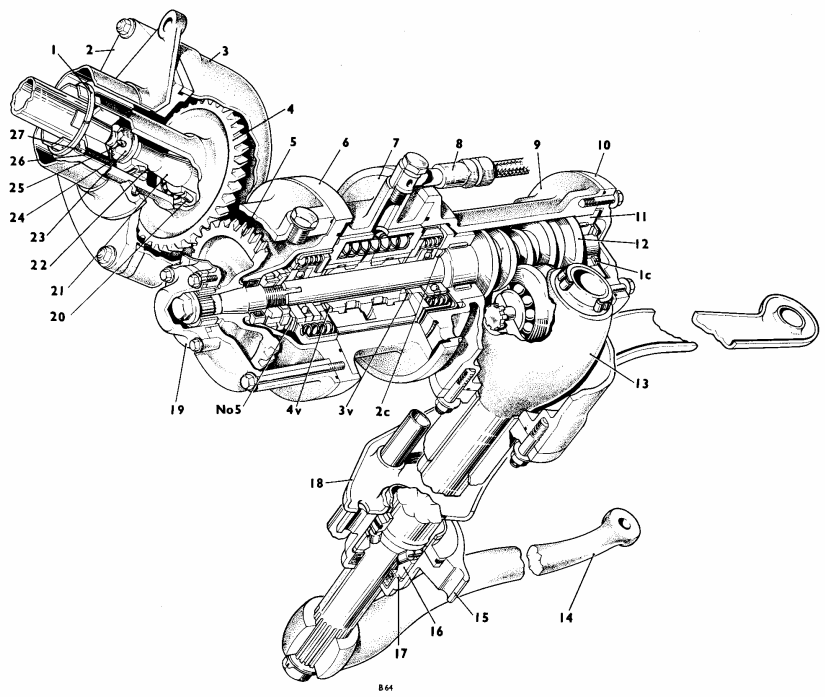

requiring very little maintenance. So little in fact that it is often overlooked. The transfer case has a filler plug and a level plug and the oil to use is SAE 90. Awkward to get at, the use of a hypodermic syringe is probably the simplist tool to use.

The other area to watch is the backlash between the two gears (4 and 5 above) in the transfer case. These can be adjusted until there is just no play.

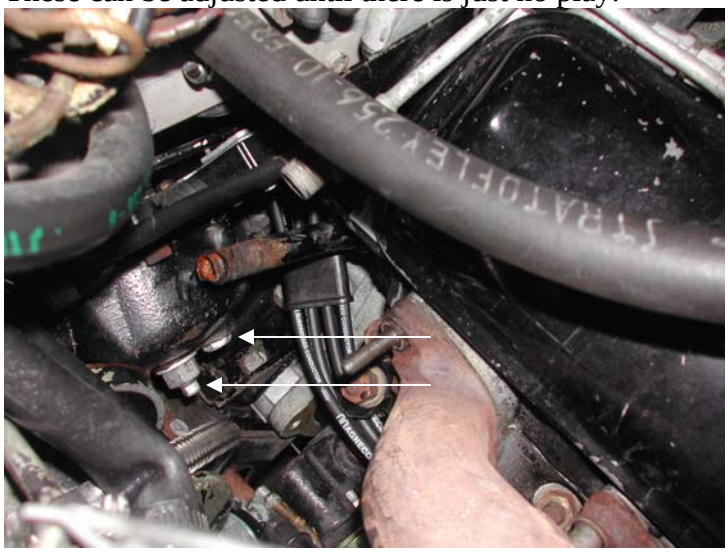

It is interesting to note that the whole steering box on Cloud II and III's is mounted in rubber bushes on the outside of the chassis. And the arm extending forward and shown in the first diagram is bolted to the top of the chassis again through rubber bushes. The function of the arm is to stop the whole box turning when under load. The rubber bushes do rot with the oil around them and if they appear squeezed and soft – replace them.

And this is what it looks like from above. The filler plug is obscured here but is arrowed on the picture. Seen here is the lash adjuster (lower arrow) and the level plug.

Fol klaw and mantra seem to be the rule for many movements and I suppose our interests are not immune. I see that the other Marque Club is drilling people in 'when the badge turned black' and 'when was the Kneeling Lady used' so here is a run down from the new mob's spin merchants lauding the name of Bentley. One thing they don't mention is that the name almost passed into oblivion in the early seventies as there was so little demand. In fact many cars emerged with the Flying 'B' on the grille but with Rolls-Royce tappet covers under the bonnet and RR instruments. Apparently the Board decided to scap the 'T' type but very considerable outrage ensued, not I am told from the Bentley boys but from the United States!!! In the event they kept going and as the story that follows explained not only recovered but trounced its erstwhile badge engineered mate.

THE POST-WAR BENTLEY

The Bentley marque led the way when car production began at Crewe after World War Two. The 4.25-litre Mk VI, which later evolved into the R-Type, appeared in May 1946. Designed by Ivan Evernden, it was generally conservative, though such touches as integral headlamps were seen by some as a radical departure. The straight-six engine dated back to 1938. Its Pressed Steel body was a new design that could be fitted and completed in-house. Bentley would no longer rely solely on specialist coachbuilders working mainly in aluminium over an ash frame, though Mulliner, Park

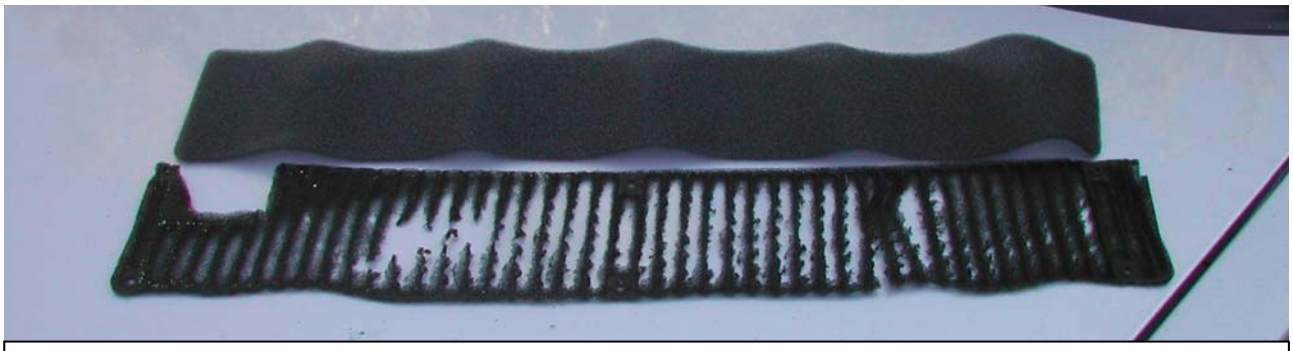

Have you checked your scuttle filter lately. With the dry weather and dust these flimsies tend to erode as can be seen above. Bits and pieces getting into the duct work can play havoc with the fans, block condensate drains and generally depreciate the effect of the evaporator and heat exchanger

Ward and others such as James Young still supplied bespoke bodies for about a fifth of its output.

A note of caution. Given that these Shadow accumulators can nudge the 3000 psi when fully pumped up, give some thought to the physical deterioration of the units some of them being 36 years old. They are unlikely to be damaged externally but a neglected unit can rust inside. If you know your car has had regular brake fluid changes/flushes and the spheres have been overhauled in memory there should be little concern. But if you buy a strange car with no documented maintenance, it may be worthwhile to have the units overhauled and inspected internally.

Despite fears about the quality of post-war steel, the heaviest gauge possible was used and the number of Mk VIs that survive testify to its durability. Capable of 90mph, it was the biggest-selling model in Bentley's history, with more than 5,200 customers by 1952. The engine capacity was increased to 4.5 litres in 1951 and these big-bore Bentley Mk VIs are now collectors' items. In 1952 the stretched engine was used for the replacement R-Type, the first Bentley to offer automatic transmission as an option. At first seen as "new-fangled", the four-speed box actually made the car 1mph faster and quickly became the popular option. Designed by John Blatchley, Chief Stylist until 1969, the R-Type was longer than the Mk VI and had restyled rear wings and boot to look sleeker and provide more luggage space. It also had the first automatic choke on a Bentley. Mulliner contributed an exotic, lightweight, fastback body for the highly-tuned R-Type Continental model which, with a top speed of almost 120mph, became the fastest four-seater in the world. Evernden's aerodynamic design harked back to a pre-war Bentley Corniche design, and caused a sensation. It is one of the most admired cars ever built.

The Bentley post-war design prospered for ten years, but 1955 signalled the first new car to be both built and engineered at Crewe, the 100mph Bentley S1. Its softer styling made its more upright predecessors appear "of their day". This was the last Bentley to be powered by a six-cylinder engine, the 4.9-litre version used in later R-Type Continentals. The S1 was a foot longer than the R-Type, to give the occupants more space, and automatic transmission was now standard. The Bentley S was continually improved over the next 11 years. By now only six per cent of bodies were bespoke, but the Mulliner S Series Continental was an outstanding example, with its sweeping fastback body in two-door saloon or Convertible form. The S1 had sold nearly 3,500 by 1959, when it made way for the first V8 Bentley, the 6.25-litre S2 with its all-aluminium engine. The engine format, economical on space and weight, had been developed over six years by the company's Jack Phillips and would remain at the heart of the Bentley marque to the end of the century. It was 30lb lighter than its predecessor and capable of taking the car to 120mph.

The S2 again had a Continental two-door variant, with power-steering as standard, optional air-conditioning, and body styles ranging from notchback to drophead coupe. The S3 followed in 1962, and with its four headlamps and indicators built into the wings had a more modern look. There were also interior improvements, including seatbelts all round. In the mid '60s the Bentley T became the first Crewe model to use unitary construction rather than a separate body and chassis. With its lower, squarer and more modern body style, the change was dramatic. The T featured an improved version of the V8 engine, independent self-levelling suspension and high-pressure power brakes with, for the first time, discs on all four wheels. Two-door and convertible Continental variants followed. From 1968 a three-speed automatic gearbox was standard, and air-conditioning followed

suit the next year. Self-levelling was discontinued on the front suspension, and the engine size increased to 6.75 litres. New facias with centre consoles arrived in 1970.

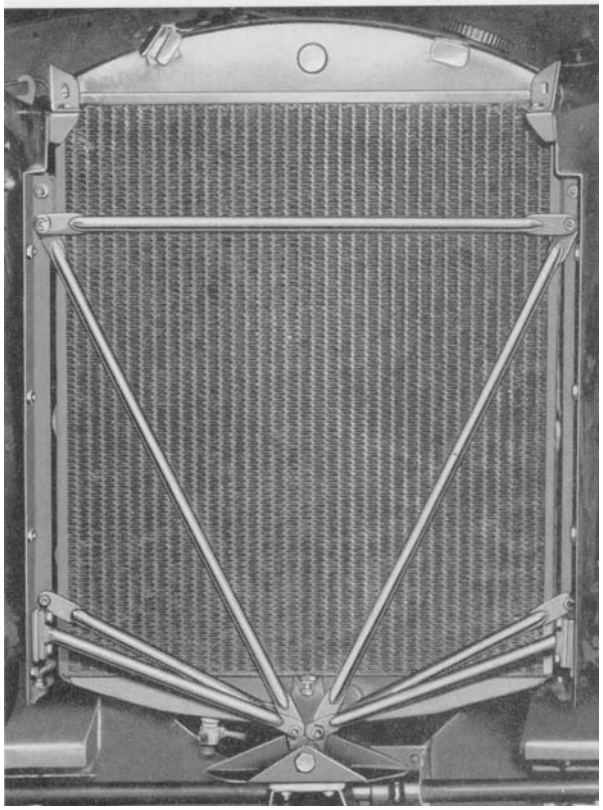

One of the great features of the pre-Shadow cars was the stability of the front end of the body. Many drivers never consider the problem of the front axle doing calesthenics over a rough road and yet the grille mudguards and bonnet are expected to sit there rock soild ignoring the antics going on beneath them. The problem arises as to how you support the front end of the body and the Factory used the relatively simple system of mounting the front end centrally. The picture shows the mount in the centre of the front axle with support bars fanning out to the inner edges of the front mudguards and the whole front assembly swivels around this one point. The large mounting bolt is insulated with a standard Silentbloc bush. The cross bar at the top of the radiator seen here was not used when air conditioning was fitted presumably allowing the condenser to stop the mudguards spreading. But if there is no condenser the bar is essential otherwise you stand a good chance of pulling the sides out of the radiator!

In 1977 the Bentley T2, with its fully automatic split-level air conditioning, power-assisted rack and pinion steering and revamped facia, was introduced. It was built until 1981. The desirable coachbuilt version of the Bentley T was made in saloon and drophead coupe versions until 1971, when it was then modified and relaunched as the Bentley Corniche. Although the two-door saloon was discontinued in 1980, the drophead, renamed the Continental, continued until the mid '90s. The T Series belonged to the era of "badge engineering" and, though almost identical (bar the radiator) to the Rolls-Royce Silver Shadow it was kept very much in its reflection, selling only about 9 per cent of the total. Nowadays, it is the Bentley that commands the higher price. "Bentley will be back!" Managing Director David Plastow told members of the Bentley Drivers Club towards the end of the '70s. The revival of the marque began in 1980 when, as Rolls-Royce merged with the Vickers Group, the exciting Bentley Mulsanne, powered by a 6.75-litre V8 engine, was announced. The Mulsanne, styled by Fritz Feller, was the first standard Bentley to be given a name, and one designed to evoke the company's glorious Le Mans days. It had a modern, aerodynamic body with 30 per cent more glass area and was capable of 120mph. Initial high demand was unfortunately affected by a gathering world recession, but Bentley was ready for economic recovery with an even more powerful model that cemented the revival of interest in the marque. In 1982, the 140mph Mulsanne Turbo, hailed in recognition of supercharging achievements of 50 years before as the new "Blower Bentley", could cover 0-60mph in seven seconds, faster than some Ferraris. The marque's broad appeal received a further boost in 1984 with the arrival of the Bentley Eight, a naturally aspirated four-door saloon with simplified interior trim, chrome mesh radiator and stiffened suspension, another reminder of Bentley's sporting heyday. It was built until 1992. Turbocharging remained fashionable, however, and the Mulsanne Turbo was replaced by the high-performance Turbo R, with adaptable damping to improve its ride and handling. It caught the public's attention when it broke a variety of distance and speed records in 1986. The Turbo R became one of Bentley's best-selling models over the next nine years, while another addition, the Continental R, recalled the heydays of Bentley convertible motoring. The late '80s saw fuel injection replace carburettors on all Bentley engines. The Mulsanne S was produced for five years from 1987, with more sporting characteristics and a facia derived from its turbocharged counterpart. This was the year anti-lock braking was introduced on Bentleys.

Mirror Retention – Silver Spirit

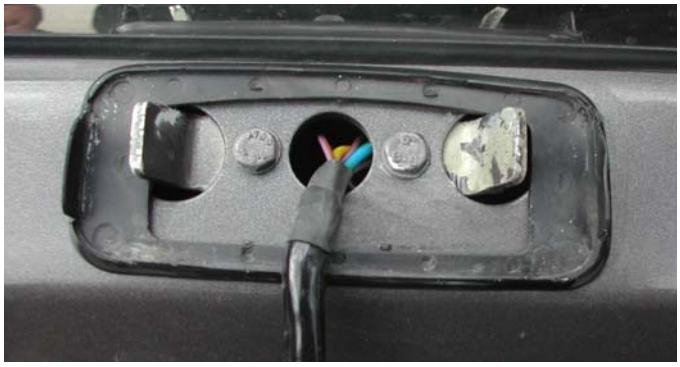

A fairly desirable feature I hear you say. But here you see the shedding of a unit on a very nice Spirit and as it was on the passenger's door the driver was unaware of this rather sorry condition. Fortunately the mirror was not lost as the plug on the loom feeding the mirror motor held fast. The mirror is held by one Allen headed grub screw accessed through a slot in the mirror base at the rear of the unit. The front base mould of the mirror has a slanting face that hooks under a steel 'U' piece and the screw engages the rear of the same 'U'. What appeared to have happened here was that the mounting screw had been over tightened bending the rear end of the 'U' forward and providing very little grip for the screw. The 'U' is actually very mild steel, quite thick and easily bent back to the correct shape. I imagine it to be a design feature allowing the mirror to detach in the event of smacking a passing pedestrian. It also has the job of hanging on in gale force winds. In this case a guestimate of where the 'U' shape should be was made and the ear bent with a shifter. The grub screw was then tightened to hold onto the ear but not bend it. If you need to remove the mirror assembly, pull off the interior trim which will allow unplugging the wiring which can then be threaded out of the door. On replacement pay particular attention to the wiring run to ensure it does not get tangled with the window mechanism.

METAL FINISHES

For those among us who can gaze into an immaculate engine compartment of one of our cars and escape the harsh realities of this world they will know what I am referring to. The non-painted bits that have to withstand lots of handling and of course the myriads of bolts and nuts should all have a dull silver coloured finish. For years this was passivated cadmium plating but in line with smoking, racialism, red meat and marriage this seems to have been phased out. I found the following in a technical training booklet which may be of interest. You will be familiar with the aqppearance of the passivation coat particularly yellow which does look out of place in an RR although the odd bought in mid does appear from time to time. Zinc clear seems to be the answer. When you pull components down give thought to bundling up the relevant bits and pieces and taking them to your friendly local plater who will gladly throw some zinc over them. The finished result is excellent and it preserves things for the next hapless owner!

Zinc Plated

• The most economic and common fastener finish, comprising a thin coating of zinc applied either by electroplating or mechanically. A shiny silver grey appearance, it will normally be enhanced by a chemical chromate passivation conversion which applies a harder surface film. This can be clear (bluish tinge), or irridescent yellow which is thicker and gives marginally better protection. Clear is referred to as zinc, zinc clear, blue zinc. Yellow is referred to as zinc plate gold (ZPG), zinc yellow chromate (ZYC), zinc di-chromate, zinc yellow pass.

Cadmium Plated

Formerly a popular electroplated or mechanically applied finish, looking like but giving slightly better protection than zinc and providing increased lubricity; also chromate converted. Very seldom used today due to its toxicity and environmental non-acceptability. If specified, it is usually through habit, error or ignorance and possible confusion with zinc.

The '90s turned out to be an exciting decade for model development. In 1991 the thoroughbred Continental R two-door coupe made its debut. The archetypal Bentley grand tourer, it could accommodate four people and their luggage in comfort, while its 6.75-litre turbo engine offered 150mph performance. Six hundred of these cars - two years' planned build - were ordered in advance. In 1992 the naturally aspirated Bentley Brooklands four-door saloon replaced the Mulsanne S and the Eight. It combined exceptional comfort and space with a supple ride and agile cornering, and was another key model in attracting new customers to the marque. In 1994, the Turbo S and Continental S were introduced as limited-volume cars. The following year saw the arrival of the head-turning Azure, the first all-new Bentley convertible for almost 30 years and the most powerful open-top four-seater in the world.

Have you noticed that you have to lift the key in your ignition switch to access the 'ACC' position? This is a direct result of wear on the lock mechanism caused by hanging festoons of keys and gimjaws on the key ring. With the car bouncing up and down the key works in the lock wearing its supports away until one day the lock simply won't work!

The Bentley Turbo R Sport was launched in 1996 along with the high-performance Continental T coupe, with its close-coupled chassis, massive alloy wheels and tyres and V8 turbo engine. Intended to be built in limited volume, the Continental T aroused so much interest that it became an integral part of the Bentley stable. The following year its output was boosted by 5 per cent to 420bhp, and its 650lb ft of torque was higher than that of any other production sporting motor car, providing 0-60mph acceleration in 5.7 seconds and a shattering top speed of 170mph.

The Continental SC, a sedanca coupe with a unique high-tech glass roof with removable panels, found a following from 1998. Then, Chief Stylist Graham Hull's new four-door saloon with an advanced body style that paid subtle tribute to the Bentley S-type was launched at Le Mans in 1998. This was the Arnage. With its twin-turbo 4.5-litre V8 engine - the first new Bentley unit for more than 40 years - and advanced suspension, it became the ultimate statement of performance combined with refinement. Until, that is, it was followed by the exhilarating Arnage Red Label which, with its 6.75-litre V8 engine, delivers more power and torque than any other production saloon in the world. Tantalising glimpses of possible future directions for Bentley have been indicated by concept cars such as Project Java, which caused a stir at the Geneva Motor Show in 1994, with its 3.5-litre twin-turbo V8 engine and five-speed automatic gearbox. ☸

URRGH!

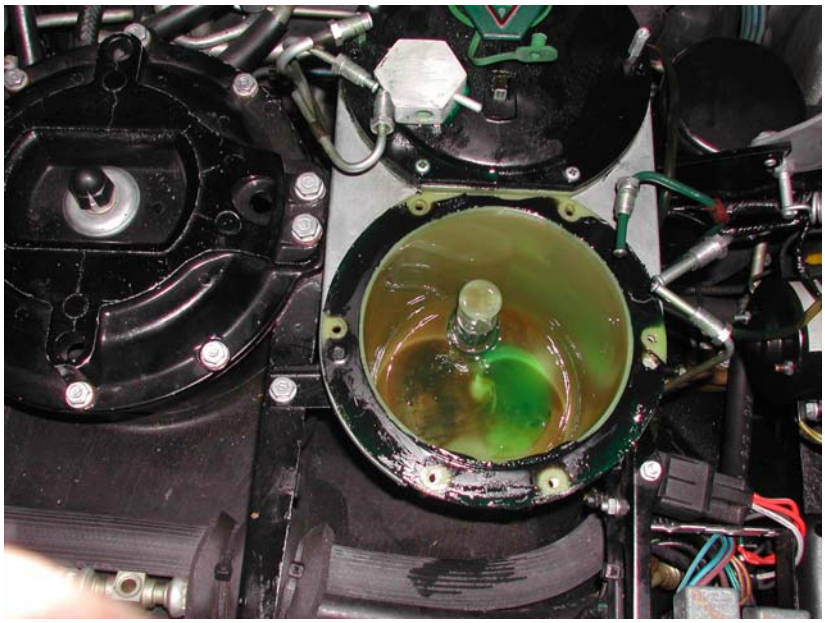

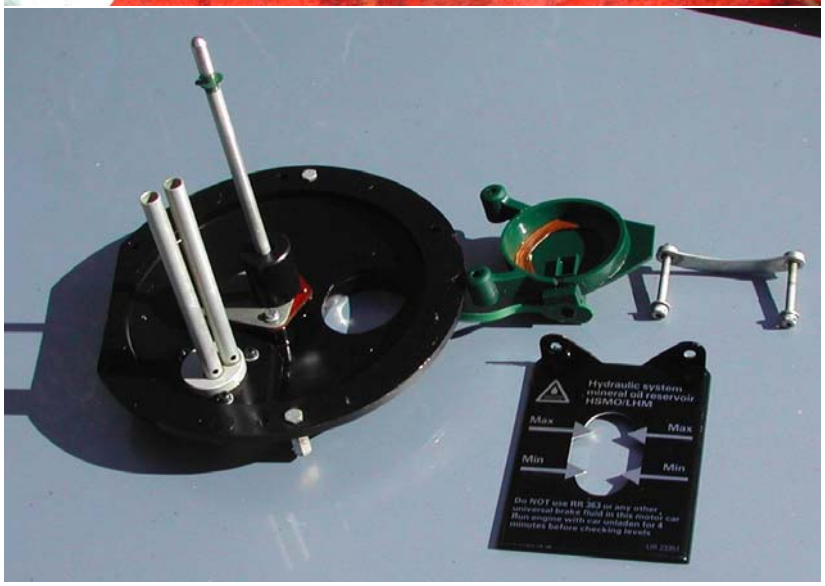

It is your good fortune that this picture is not printed in colour, resembling as it does an Afghan spittoon. The colour of the reservoirs used in the post-Shadow cars is bad enough but the mineral oil with hydraulic detritus swilling around is enough to distract the most hardened judge. Gone are the cadmium plated tanks that developed interesting patterns of rust, gone are the little glass windows that grow more crud than a dirty fish bowl and gone are those dinky hideously expensive filters that fold up and rupture. In truth it is all probably for the better as the above setup wont rust, dirty its windows as it has none and the filter is pure plastic as is the bowl and lid. H Royce would be rotating in his grave at the sight of selastic sealing the lid but it does the job very well and doesn't leak. The filter is prised carefully off a plastic neck at the bottom of the reservoir and is easily cleaned. The lid also of plastic has had a number of changes but the most important seems to be the modified cap to ensure as far as possible that only mineral oil is used and that has to be put in with a special bottle. In the early days when mineral oil was a novelty there were a few cases of bright sparks topping up the system with RR363. Even the slightest amount necessitated the complete overhaul of the entire system and the replacement of many components which today would probably make a nasty hole in $30K! The only problem I find is seeing the level of the oil but a $6 torch from Woolies which has a very fine bright beam, reveals all!

Hmmmmmmmmmmmmmm

This appalling bit of craftsmanship nestles in the centre of the Silver Spirit top roll. The hole is normally closed off with grille plates and the finished result is quite reasonable. But the above was the result apparently of a professional endeavouring to install an alarm light in the grill and apparently had difficulty getting it all together. The material is vaguely like styrofoam and I have yet to work out how one would generate some more to repair this damage. Interestingly this roll on an Australian delivery is covered in hide and not vynal as seemed to be the practice with the Shadows. In which case lots of hide food would not go astray!

Mystery Pot

Ever laid under a Shadow or Spirit and wondered why this contrivance with three tubes disappearing into it was installed? It is a charcoal filled cannister that connects to the vapour side of various points of the fuel system. The idea is that the charcoal absorbs the vapour and one's nostrils or those of the nearest pet environmentalist are not assailed! They are supposed to be replaced from time to time but as far as I can gather it just doesn't happen. At some $300 each they are not to be fitted on a whim I suggest! They are made of plastic and unfortunately not readily demountable as we could stoke them up presumably with fresh charcoal. One of the lines to the filter comes all the way from the rear mounted fuel tank!

SHAKING DAT SHAFT

For those who have spent countless hours 'ironing' the duck washers in the slipper flywheel fitted to pre-vee eight engines the harmonic balancer to the left fitted to the vee eight must be a gross anti-climax. The aura around the original balancer almost approached that of witchcraft. Originally developed very early last century by another manufacturer the Factory decided that this was the answer to a very early problem they had with the nose of their 6 cylinder cars' crankshafts snapping off! All car engines have to contend with crankshaft oscillation. Imagine the inertia of a torque converter full of oil at one end of the shaft and a cylinder firing at the other end. The shaft obviously has to flex radially. But then having wound itself up, the torque converter catches up and

keeps going, twisting the poor beastie the other way. And that is only for one firing. If you start loading up the front end with pulleys etc to drive all manner of gadgets it becomes a mathematical nightmare. The answer is to put yet another wheel/disc/pulley on the front end of the shaft with another bit attached to it that can flap around and confuse the whole setup. By now, my son, an automotive engineer will be crying in the wings and searching for the geriatric services in the Yellow Pages. But the original Rolls-Royce contrivance used a slipper flywheel that could oscillate through a small arc around a disc keyed to the front end of the crankshaft. Springs were interposed between the two bits to cushion the movement and the whole lot sandwiched between cotton duck washers internally to provide a friction. The amount of friction was seen as the clue to the perfect functioning of the gadget and involved assembling it with no springs and 'ironing' the duck washers until the right amount of friction remained. Frightfully complicated, laborious to set up and as far as I can gather of little effect. The outer casing of the slipper drive initially was bolted together and fed with oil from the crankshaft. The oil inevitably carried muck from the engine which lodged in the slipper drive as it acted as a centrifuge and eventually the whole assembly was so full of sludge nothing could move. Later in the early post war cars they did provide slots for the oil to escape but one wonders whether that did much to help. A clue to whether all this was manna for the spin doctors and little else, is that the commercial version of the Mk VI/Dawn engines which dimensionally and functionally were identical had no slipper flywheel, but used the simple harmonic balancer fitted to your common old Fords and Holdens which ran perfectly smoothly and didn't break crankshafts.

And here is the balancer neatly placed behind the front crankshaft pulley.

And so the Vee Eight came along and having a much shorter crankshaft the damping problem was much simpler. And above is a picture of the damper dowelled onto the front end of the crankshaft. It is as usual in two pieces, inner and outer connected by nothing else but some very stoutly bonded rubber. This balancer has done an estimated 750,000 miles and looks little the worse for wear so I suspect it will not be a high usage item for our cars in the future.

TECHNICAL DAY – BANKSTOWN SATURDAY 26 OCTOBER 02

Once again NSW Branch of the Club hosted a very informative day, on this occasion dragging us into the vagries of the Hydramatic single coupling transmission. Our host and presenter was Neville complimented by his wife Rhonda who organised the requisite sausage sizzle. It was gratifying to see some 24 people turn up with their cars and sit through some rather detailed technical material. We were made most welcome by the locals as usual and look forward to the next episode! It was good to see other Canberra attendees, Martin Bennet, Kerry Bos and Ken Baldwin.

The Hydramatic box was used on a number of American cars and at least by Armstrong Siddeley in their Sapphire. Affectionally known as the Jerkomatic in those quarters, it seems that the heavier Rolls-Royce cushioned the gearchanges more so than the other users. One of the principal themes

brought out in the lectures was the need for clean oil, correct adjustment and the minimisation of heat.

In todays world of whizzbang transmissions, the old Hydramatic is as crude as a horse drawn plough but I must say I really get comfort from that big cast iron casing that doesn't warp or crack!

In all the whole session was well worthwhile, removing yet another veil of mystery from these cars!

Another sad picture from eBay. Seems the heating system was augmented in this Corniche drophead with fairly undesirable results

If undeliverable please return to Post Office Box 8 MAWSON 2607 ACT AUSTRALIA

POSTAGE PAID AUSTRALIA