This material has been reproduced from the Proceedings of the Institution of Mechanical Engineers, Automobile Division. Volume 178. 1963 pps 1 - 19. The History of a Dimension by S H Grylls. Permission is granted by the Council of the Institution of Mechanical Engineers.

AUTOMOBILE DIVISION

THE INSTITUTION OF MECHANICAL ENGINEERS

THE HISTORY OF A DIMENSION

Address by The Chairman of The Automobile Division
S. H. GRYLLS, M.A. (*Member*)

The Address was delivered at an Ordinary Meeting of the Automobile Division of the Institution on Tuesday, 8th October 1963.

AD L1/64
PUBLISHED BY THE INSTITUTION · 1 BIRDCAGE WALK · WESTMINSTER · LONDON · SW1

INTRODUCTION

It has become customary for the address on this annual occasion to be a life history of your new Chairman. I should like to depart a little from this custom and instead to outline the history of a dimension which, in the Rolls-Royce Company, has not altered since 1919. The dimension is a centre distance of 4.150 inches between neighbouring cylinder bores of an in-line six cylinder engine. The history will show that throughout 44 years of continuous development the gods have aligned themselves almost equally for us and against us.

THE 20 hp ROLLS-ROYCE ENGINE

Immediately after the 1914-18 war Rolls-Royce recommenced manufacture of the Silver Ghost car but realized that a smaller model was required to meet the

prevailing economic conditions. The first essential was a smaller engine and in 1919 a design was put in hand by Mr Royce at West Wittering of an engine to give about 50 hp. By then, except for a short trial with eight cylinders, Rolls-Royce had settled down to six cylinder in-line engines. The new smaller engine followed this lead. The first decision taken was to have a bore of 3 inches and a stroke of 4_ inches. The Royal Automobile Club rating of this engine was about half that of the Silver Ghost-namely 20.6. From then on the drawing board settled the general layout, on these basic dimensions, of an engine known as I.G.1. A cylinder bore centre distance of 4.150 inches was considered necessary to provide adequate intermediate bearings and of 4.650 inches to provide a centre bearing. It was on the smaller of these two dimensions that the future development of the engine depended, and 4.150 inches proved an exceedingly good choice.

The seven bearing crankshaft followed the rather niggardly practice of the early twenties, the main bearings being 2.000 inches diameter and the big ends 1.500 inches diameter. Fig. 1 shows this crankshaft.

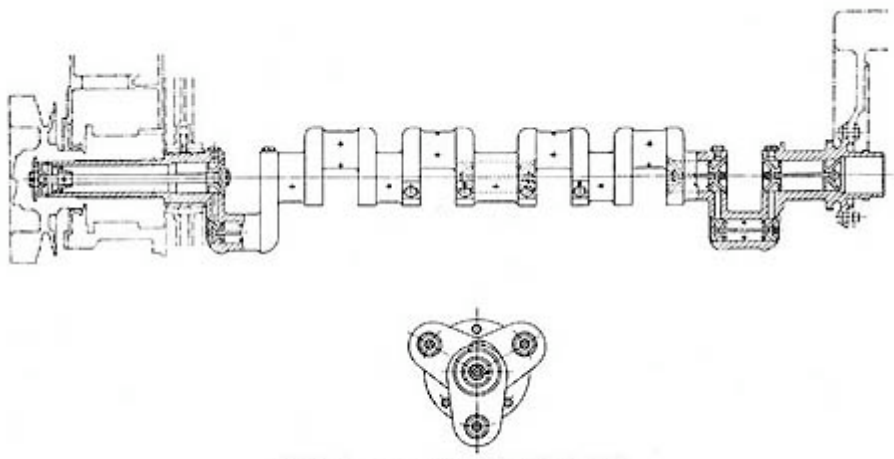

Fig. 1. Arrangement of crankshaft 'Goshawk I'

The valve gear was of the most advanced design, having two overhead camshafts. When I joined the company 11 years later, the first engine was driving a chassis bump test rig and one of my first jobs was to adjust the tappets. Far would it have been from me to criticize, but the job took a whole day.

Certain other important dimensions were a connecting rod length of 8_ inches, a gudgeon pin diameter of 0.750 inch, an inlet and exhaust valve throat diameter each of 1.250 inches.

From all of the above basic dimensions the design shown in Fig. 2 emerged. The integral block and cylinder head were bolted to an aluminium crankcase. An all-speed throttle governor was present. A very advanced damper (much better than its successor) was fitted to the front of the crankshaft. The first engine was completed in 1920. Its power curve is shown in Fig. 3, a peak power of 53 hp having been achieved for a weight of 650 lb (including exhaust manifold, dynamo, magneto, starter and carburettor). In those days a good torque at low speeds was very necessary, 84 m.e.p. being obtained at 500 rev/min. Throughout this history low speed m.e.p. has been of paramount importance.

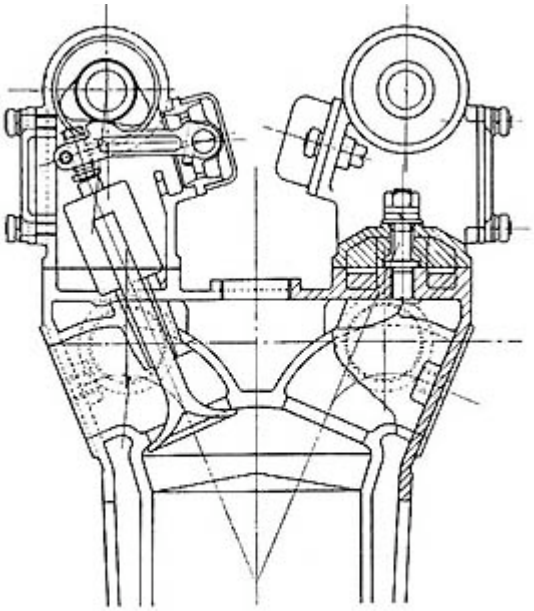

Fig. 2. Cylinder head 'Goshawk I'

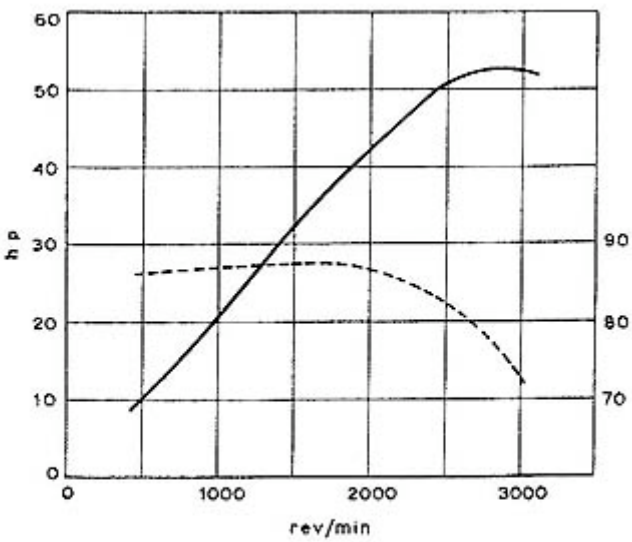

Fig. 3. Power curve 'Goshawk I'

Production of this smaller car was needed for the autumn of 1922. Its price had to be about half that of the Silver Ghost. Changes were made to the engine and although a simpler push rod version was chosen, most of the basic dimensions remained unaltered, the connecting rod being shortened to 7.95 inches. Roller tappets were used. The crankshaft friction damper was separated from the crankshaft pinion spring drive. Figs 4 and 5 show this engine, the latter portraying the five gear train in the wheelcase.

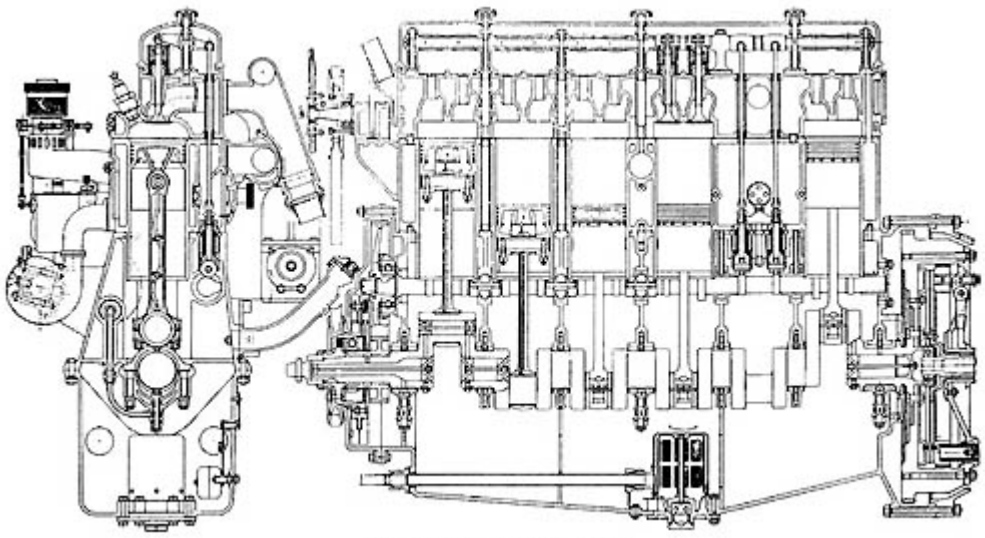

Fig. 4. Sections of 20 hp engine

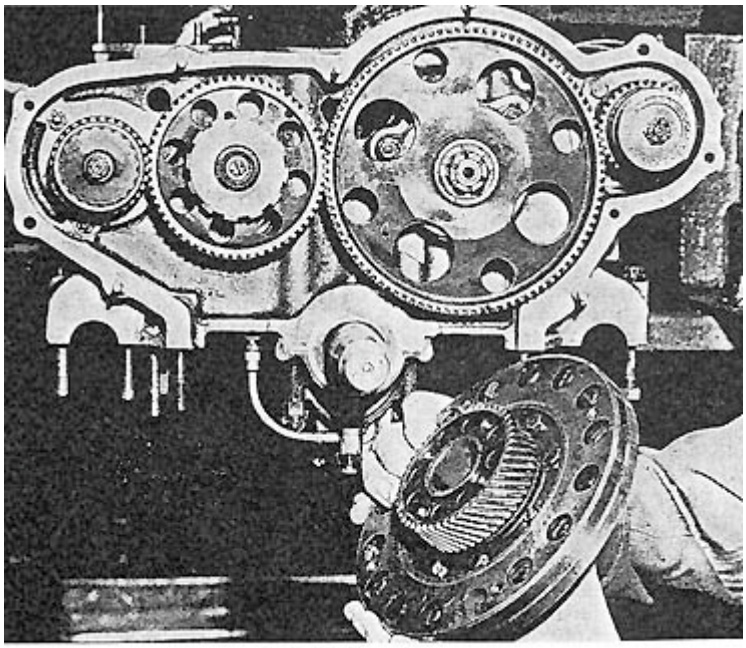

Fig. 5. 20 hp timing gears

During the next 37 years, without increasing the cylinder centres, the output increased from 53 bhp at 3000 rev/min to 215 bhp at 4200 rev/min and 3_-inch diameter pistons had been squeezed into the same centre distance.

No automotive engine ever gives enough power. For a given capacity more power has to be obtained by an increase in b.m.e.p. or an increase in rev/min. A six cylinder in-line engine has a unique way of resisting higher rev/min. Every crankshaft and flywheel assembly has a natural frequency of torsional vibration, the node being near the flywheel, but only an in-line six has a disturbing torque due to the motion of its pistons which is not only almost a pure sine wave, but one of considerable magnitude (Fig. 6). The exciting torque oscillating three

times per crankshaft revolution reaches resonance when the rev/min is one-third of the natural torsional frequency. The inertia torque varies as the weight of the pistons, inversely as the length of the connecting rod and as the square of both the speed and the stroke. Its peak value in 1922 was about 170 lb.ft at 3300 rev/min.

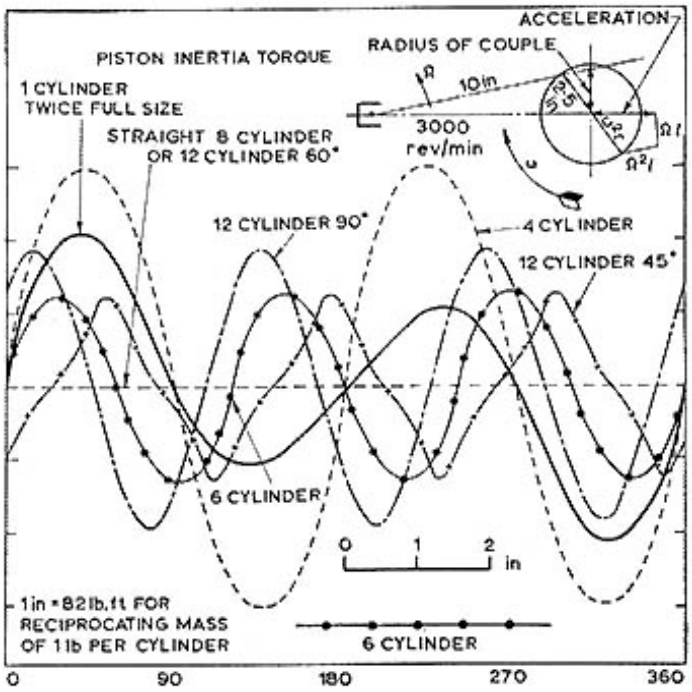

Fig. 6. Curves of crankshaft torsional vibrations

The critical speed of the first production Rolls-Royce 20 hp engine was 3300 rev/min and equivalent to about 76 mile/h in top gear on the first series of cars. Luck was with us for a time. A little below this critical speed the distributor ceased to function and the cam wheel came adrift. Even this happened very rarely as the flywheel, at 3100 rev/min, had a resonance of its own, whose thunderous noise dissuaded most drivers from seeking an Elysium further on.

Little was known in the early twenties about the necessary test bed life of an engine, but it was thought that a car should be capable of 10 000 miles of full throttle driving on straight French roads. In actual fact the white metal bearings (direct in the case of the connecting rod) lasted for about 9000 miles of this treatment. Until the advent of motorways this engine had a reputation for lasting for ever on English roads.

During the next seven years very few changes were made to the engine, the most important being a five ring piston and an 'oval web' crankshaft. The latter

was the first in a long series of changes aimed at raising the critical speed. This one change provided a valuable 400 rev/min, raising the critical speed from 3300 to 3700 rev/min. One rather interesting comment on the records of the Inspection Department reads, 'All standard 20 hp chassis despatched on and after 1.8.23 have a Thackeray washer fitted to stop dynamo drive rattles'. Nearly all the remaining change notes refer to modifications tried in the crankshaft spring drive and damper to overcome knocks, rattles and vibrations.

It seems opportune here to mention a piece of apparatus almost constantly in use when I joined the Rolls-Royce Company in 1930. This was the Summers indicator, used to measure the amplitude and frequency per revolution of torsional vibrations. Fig. 7 shows how this indicator works, and I shall always remember it as a piece of apparatus which never lied but often flew into pieces. Nowadays beautiful instruments can be obtained in America, but in 1930 we made our own and rather frequently had to renew them.

Coachwork did not grow lighter as the years proceeded. Better acceleration of the car was required. An unceasing quest for torque and power had begun.

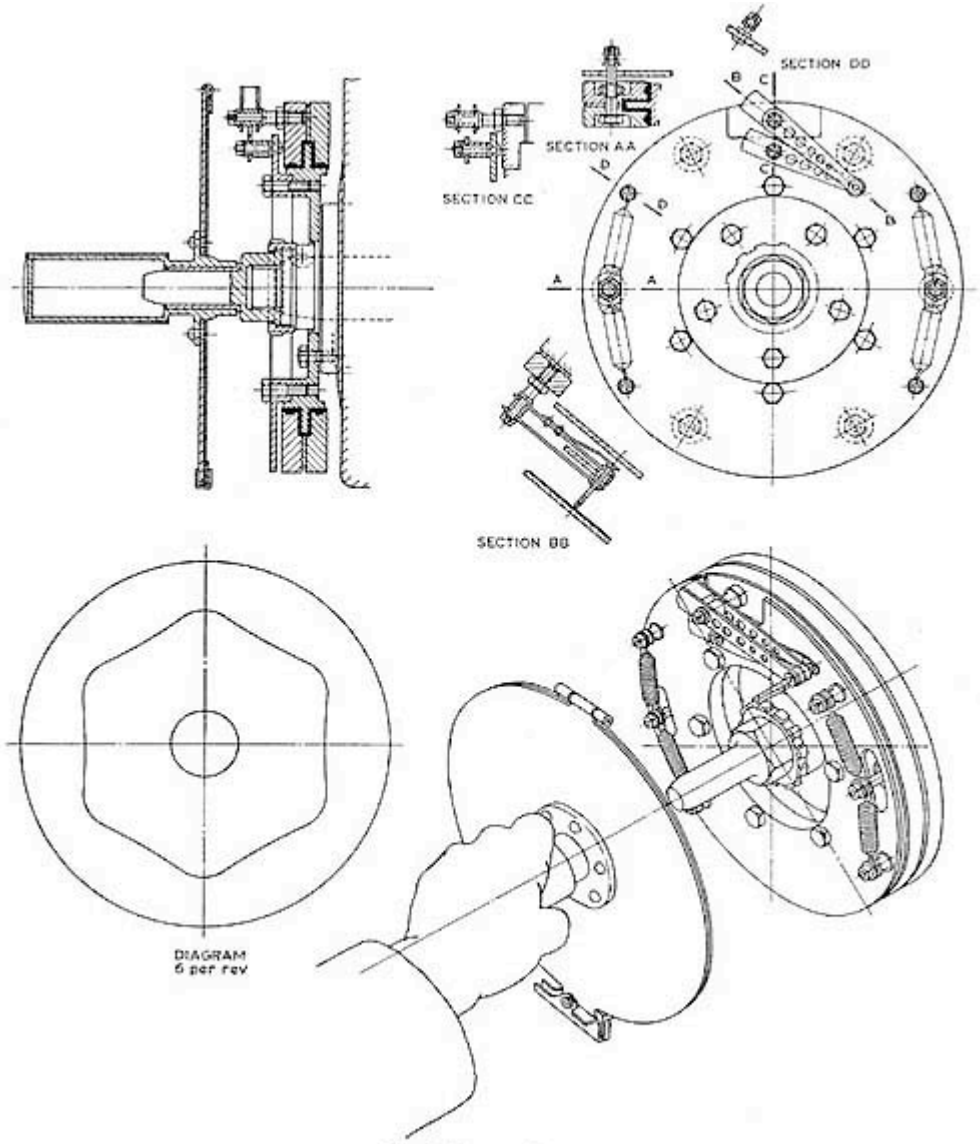

Fig. 7. Summers indicator

20/25 hp ENGINE (3.68 litre)

In 1930 the bore was increased to 3_ inches, there still being plenty of room for water between the bores. The critical speed had to be raised, a crankshaft with larger journals and crank-pins achieving 4000 rev/min.

I have already said that six cylinder engines are dogged by a critical speed which falls almost certainly within the desired range of useful speed.

It seems appropriate to digress and expand on this one feature so perpetually in the minds of designers and development engineers. In the early twenties the critical speed was an accepted nuisance to be borne bravely, the half speed period (six per rev) due to gas torque being rendered inaudible by the crankshaft damper.

In 1928, Major B. C. Carter, then working at Farnborough, published his formula for calculating crankshaft stiffness and critical speeds. Major Carter had been working on this subject since the 1914-18 war, when failures in the Arab engine had to be overcome. It is of such interest that I quote it in full:

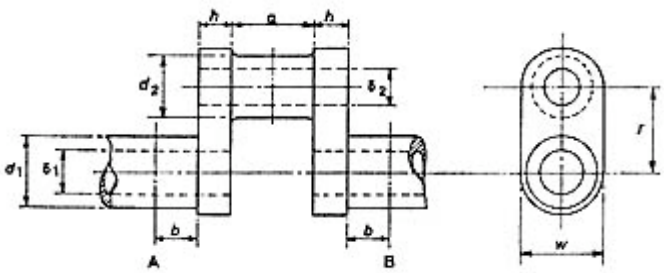

Equivalent length A to B $= l$

$$l = (2b+0{\cdot}8h)+\tfrac{3}{4}a\left(\frac{d_1^4-\delta_1^4}{d_2^4-\delta_2^4}\right)+\frac{3}{2}r\left(\frac{d_1^4-\delta_1^4}{hw^3}\right)$$

Stiffness A to B $= \dfrac{C\mathcal{J}}{l}$ where $\mathcal{J} = \dfrac{\pi}{32}(d_1^4-\delta_1^4)$

For relatively large flywheels the critical frequency of the whole assembly is

$$n = \frac{1}{2\pi}\sqrt{S.\left(\frac{1}{I_f}+\frac{1}{I_c}\right)}$$

an approximation I believe attributable to the late S. S. Tresilian.

S = stiffness of whole crankshaft (lb.ft/radian)

I_f = flywheel inertia (slugs ft^2)

I_c = crankshaft equivalent inertia

= inertia on nose$+\frac{1}{3}$ distributed inertia (slugs ft^2)

A sample calculation is given in the Appendix.

It will be seen immediately that the critical speed can be raised most significantly:

(1) by reducing the flywheel inertia;

(2) by reducing the inertia of the crank damper fixed hub;

(3) by increasing w, the width of the crank webs and, to a lesser extent, by increasing the diameter of journals and crank-pins, the last adding quickly to the distributed inertia.

Between 1922 and 1959 the critical speed rose from 3300 to 5400 rev/min in spite of the arrival of balance weights whose inertia was all on the debit side. No less than 38 different crankshafts appear on the lists of parts up to 1939!

One might ask why apparently no attempt was made to damp the critical speed and run through it. The disturbing force is large and of the worst possible shape. The accelerations connected with the critical speed are enormous. ±3º, three times per revolution at 5000 rev/min, corresponds to an acceleration of 125000 radians/sec^2. The forces required to retain working parts slightly out of adjustment were beyond the strength of the materials and their attachment to the crankshaft.

Apart from vibration, things seemed in favour of more power. In 1930, when the compression ratio rose from 4.6 to 5.25, the valves did not suffer and the bearings gave less trouble. Metallurgy had more than kept pace with requirements.

Now that engine speeds of 3500 rev/min and over could safely be used on the road the flywheel vibration at 3100 rev/min had to be eliminated. A flywheel vibration was known to coincide with the roughness felt by the passengers because at 3100 rev/min the turning marks on its periphery became blurred. With the aid of a micrometer, measurements showed that the flywheel departed from its normal plane of movement by 0.020 inch, when 3100 rev/min was reached. With the gearbox removed optical methods gave a picture of the vibration shown in Fig. 8. Improvements could not be assessed without difficulty and outstanding was the effect of a counterweight on No.12 crankshaft web. A weight opposite the pin equal to the whole of the web, half the crank pin and big end, and one quarter of the reciprocating weight, removed all trace of the vibration. Unfortunately 11 similar weights, one on each other web, reduced the speed of the torsional vibration excessively and a compromise had to be sought.

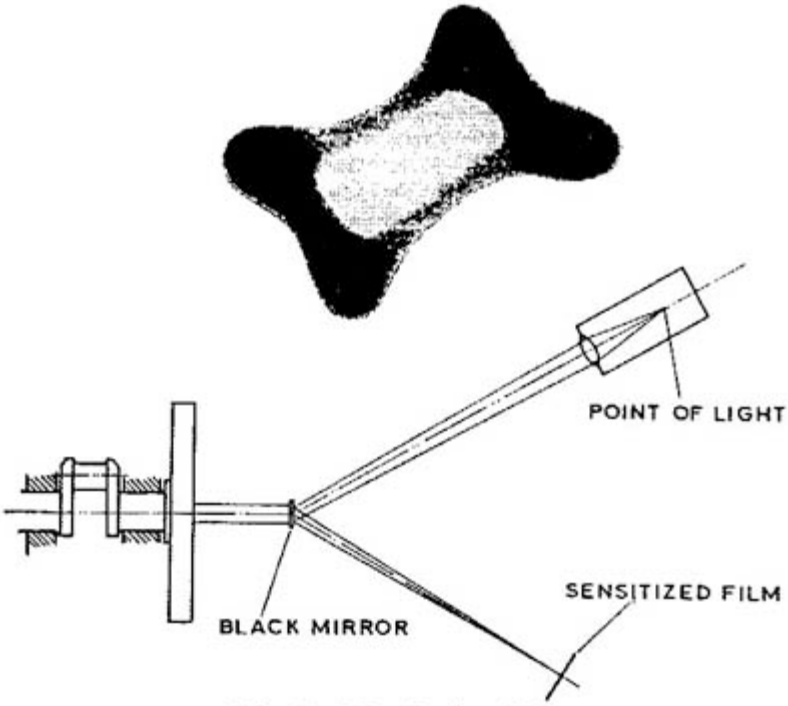

Fig. 8. Flywheel wobble

The effect of balance weights could be detected on No. 12 web and also on webs 6 and 7, where they reduced the centre bearing load and hence increased the life of the most highly loaded bearing. The compromise resulted in what became known as 'R's eight weight scheme', invented by Sir (then Mr) Henry Royce. It is shown in Fig. 9 and appeared in 1932. A yet stiffer shaft offset the greater inertia. One hundred per cent local balance was not attainable, but the flywheel itself responded to a change in shape. The flange connecting the heavy rim to the crankshaft, hitherto very stiff, was reduced to a diaphragm 0.100 inch thick. The rear end of the crankshaft could now oscillate in a swash manner with less disturbance at the flywheel rim.

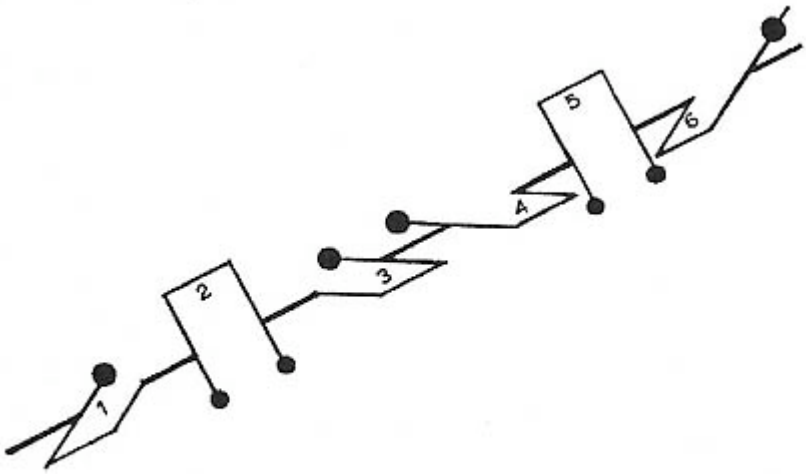

Fig. 9. 'R's' balance weights

Almost identical troubles were being encountered at this time by the Packard Company in America. To determine the best balance weight arrangement they mounted a crankshaft vertically and applied forces to it at each crank pin equal to the centrifugal forces of rotation (Fig. 10). They found that a single force 140º from Nos 3 and 4 crank pins pulled the crankshaft straight again. From this they devised a four weight scheme on webs 1, 6, 7 and 12, the end ones being 20º from opposite the pins and the middle ones 40º from opposite the pins. This arrangement with overhanging weights was tried with success at Derby but was never standardized.

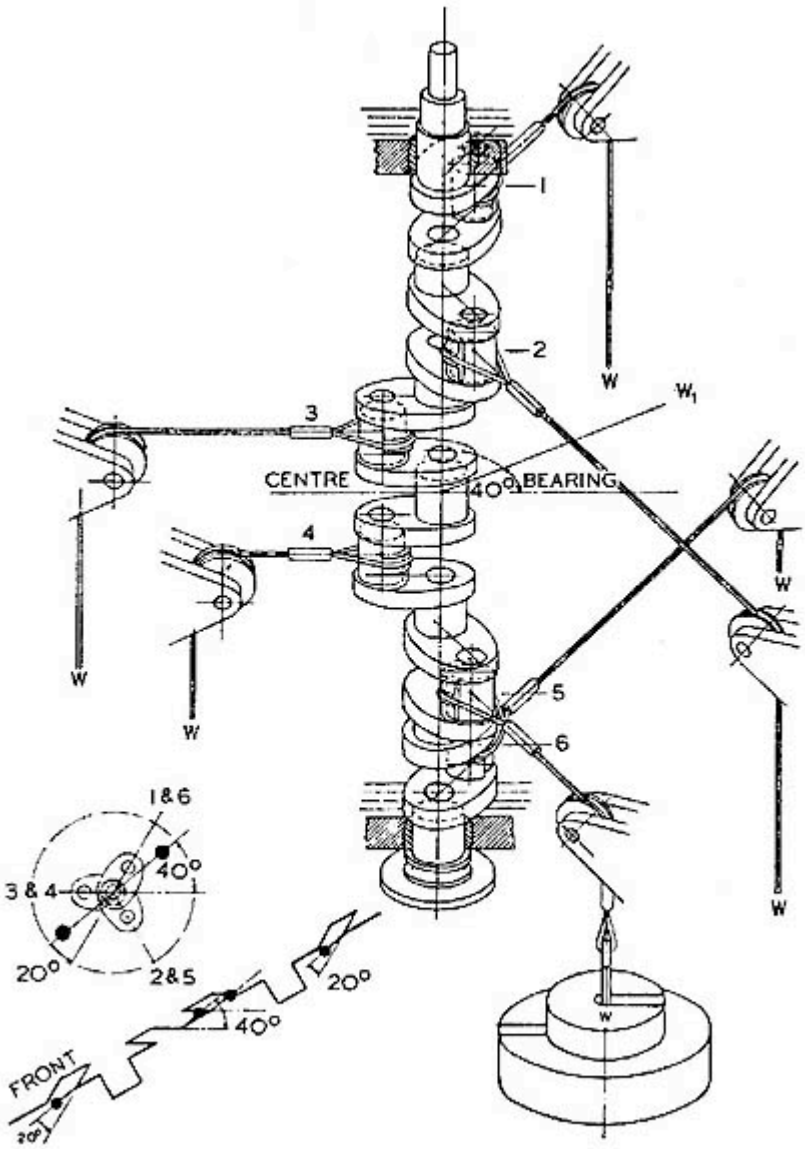

Fig. 10. Determining Packard balance weights

The best attachment for balance weight was a nice design problem, a short run near the critical speed often shaking them loose. Our designs are shown in Fig. 11.

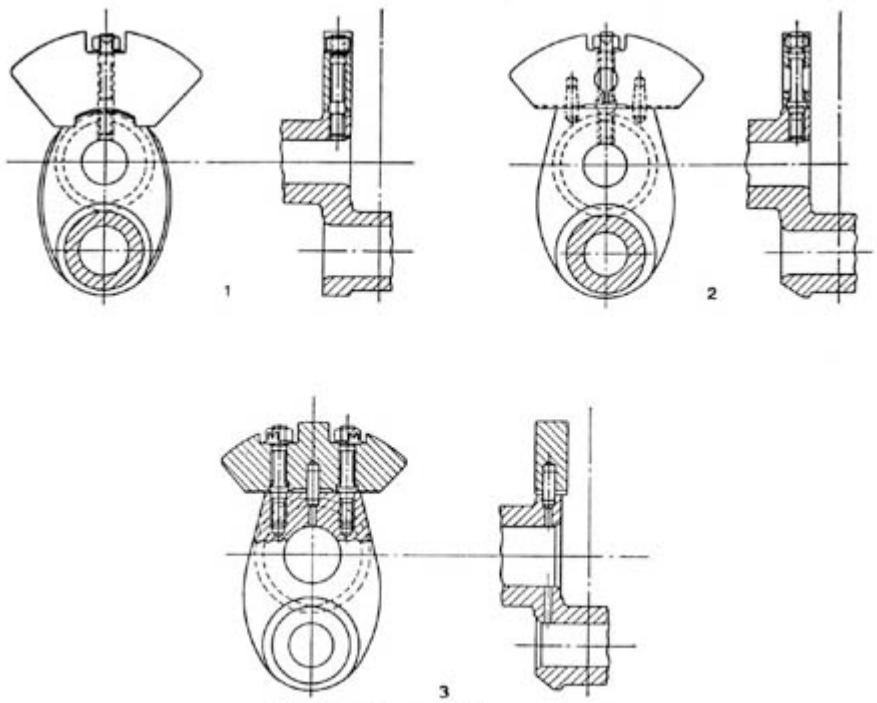

Fig. 11. Balance weight attachments

Except in the original engine 1.G.1., from 1922 to 1932, the arrangement at the front of the crankshaft was a small damped spring drive for the crank pinion and a separate friction damper for the six per rev vibration, the hub of this damper and the fan pulley being rigidly mounted on the crankshaft. In 1932 the 'low inertia spring drive' appeared. A comparison is made in Fig. 12. Now only the hub of the main damper was fixed to the crankshaft, it having been agreed that a figure for spring drive rate and damping could be found which took care of the six per rev vibration and also cam wheel rattles. Another 250 rev/min had been added to the critical speed.

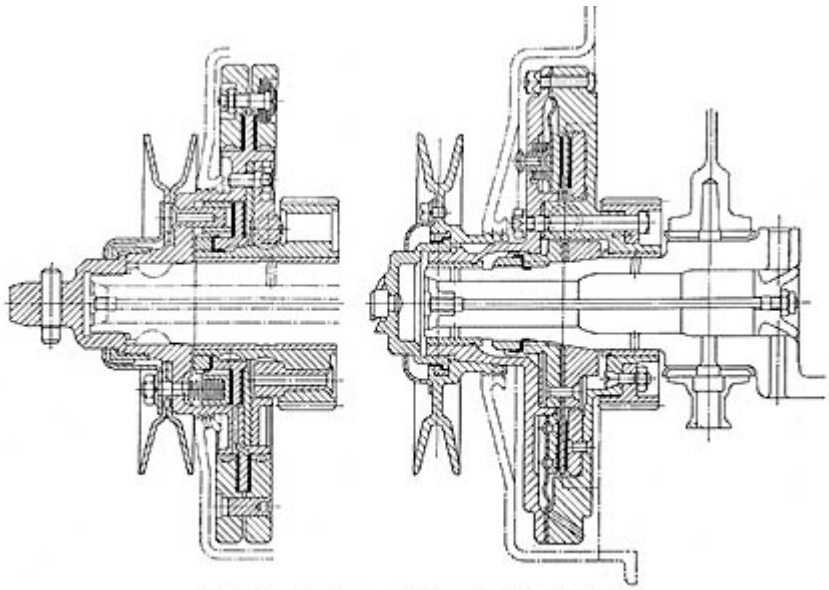

Fig. 12. Crankshaft dampers: Left—standard, right—low inertia

Valve spring design easily matched the increasing rev/min, but bearings needed a better life and in 1933 the crankshaft was nitrided. It still ran in white metal bearings. 30 000 miles of French testing at considerably higher speeds was now the order of the day.

In 1934 a yet stiffer crankshaft was devised, camshaft accelerations were increased and a 'cam balancer' was incorporated to eliminate rattles of the five gears at the front of the engine (Fig. 13).

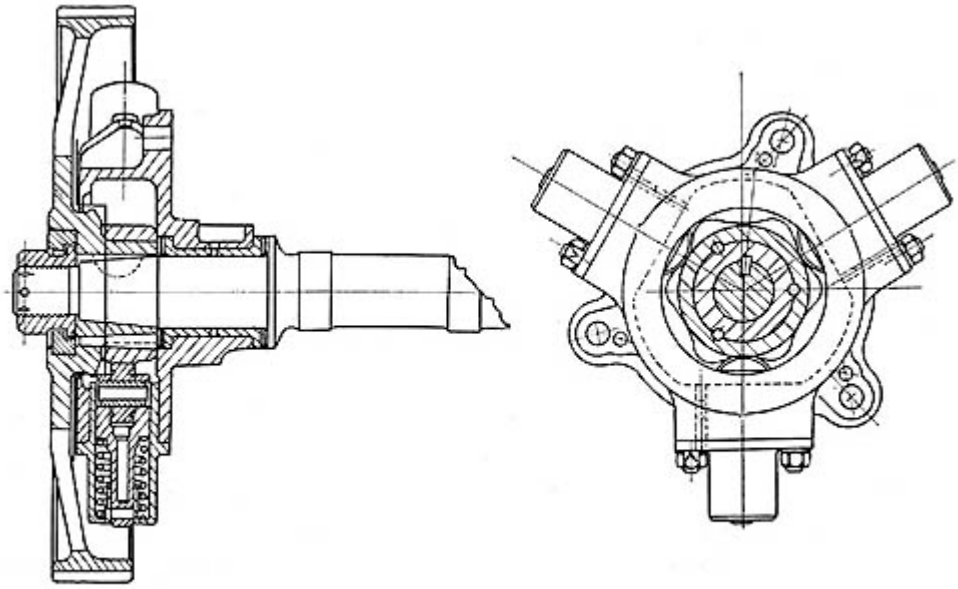

Fig. 13. Camshaft balancer

Parallel with the development of the Rolls-Royce engine, refinement having been of paramount necessity, a different cylinder head, known as J1, had been on the test beds. Having a higher compression ratio and a turbulent bath tub shape (Fig. 14), more but rougher power was available if ever required. The acquisition by Rolls-Royce of the Bentley Company could not have been better timed. After a short experimental digression with a 2.36 litre supercharged engine, the J1 engine was fitted to the first 3_ litre Bentley made at Derby. The engine differed from the Rolls-Royce 20/25 engine in cylinder head, camshaft, compression ratio and carburettors (2 S.U.'s). The connecting rod length of production engines was 7.950 inches, although the prototypes had been _ inch longer at 8.250 inches. The critical speed had now reached 5000 rev/min and a red mark on the rev counter limited the user to 4500 rev/min – uncomfortably close!

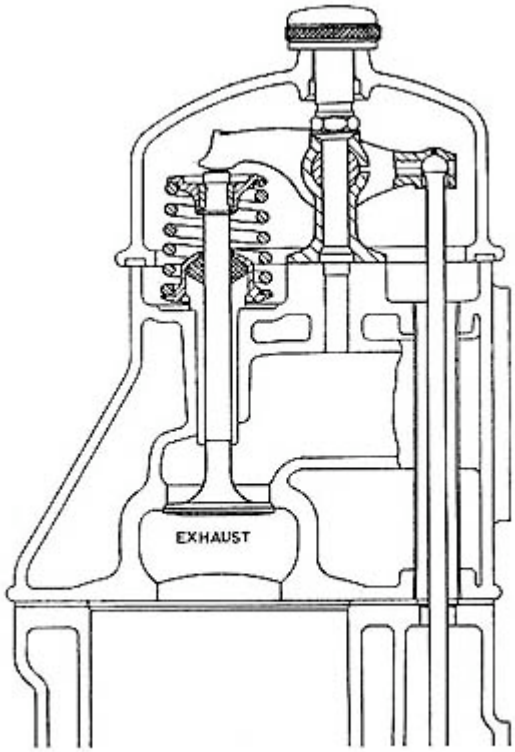

Fig. 14. J1 cylinder head

After a year of production more power was obtained from the Bentley engine by abandoning split skirt pistons in favour of the fluted 'Aerolite" design. A small noise increase was accepted.

25/30 hp ENGINE (4.257 litre)

Cars of the same basic design seem to get a little heavier each year and to preserve acceleration axle ratios become lower. The safe rev/min could be reached in top gear and more torque was once again required. The bore therefore was again increased, this time from 3_ to 3_ inches, the Rolls-Royce being known as the 25/30 and the Bentley as the 4_ litre. White metal bearings no longer sufficed and aluminium-tin bearings, invented in the Rolls-Royce laboratory, were fitted to both main and big end bearings. This material needed more running clearance than white metal and was responsible for an increase in noise and roughness.

An interesting lubrication problem had come to light during recent development. Although the Bentley engine would stand 160 hours full throttle at maximum revs on the test bed, big end failures occurred quite soon in Continental motoring. Believing that high-speed overrun might be the cause, an engine was run up

light on the test beds. The 160 hours had come down to a mere fifteen seconds. Fortunately, two oil holes in each crankpin at 90º and 270º solved this problem.

So far this history has been mostly of designs which reached the production stage, but four interesting experiments had also been done.

The first of these related entirely to engine roughness. Instead of the separate iron block and aluminium crankcase an integral cast iron crankcase was made. For a weight increase of something over 1 cwt the engine was noticeably smoother both at full throttle low speeds and during high speed on overrun. As an amusing sideline it appeared to have a far better performance, the 8.250-inch connecting rods having been fitted instead of the 7.950-inch ones! The fact that the engine went together is a nice demonstration of where the compression volume normally resided.

The second experiment was a further attack on the critical speed. A four-bearing crankshaft and suitable crankcase were made to suit the existing cylinder centres. This was obviously not ideal but a rise of 400 rev/min was recorded, using the same journal and pin diameters.

Thirdly, an overhead camshaft version of the engine was made. The open exhaust power from 3.68 litres proved to be 160. A cross-section of the engine is shown in Fig. 15. This would have been a very worthwhile increase in power, but the development to achieve sufficiently silent valve gear would have taken a long time.

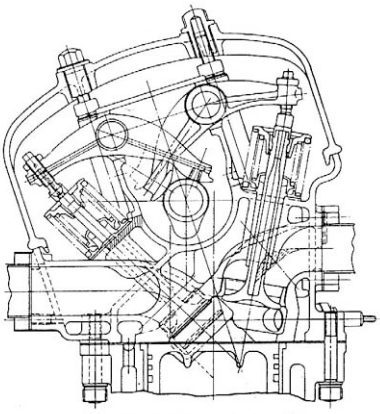

Fig. 15. O.H. camshaft engine

Fourthly, as a rival to the overhead camshaft engine a centrifugal blower running at about six times engine speed was tried on both the test bed and in a car.

Although reasonably silent in operation the increase in m.e.p. was all at high rev/min and rarely available to the driver. For most motoring a slightly higher m.e.p. at low speeds is worth more than a big increase in power.

I have already mentioned that the first Bentley made in Derby was originally designed to have a supercharged smaller engine. This engine, known as Peregrine, had a bore and stroke of 2.725 x 4.125 inches, having been scaled linearly in the ratio of 0.8 of a larger engine of 4.404 litres capacity, known as J3. The latter had a bore and stroke of 3.400 x 5.000 inches set in cylinder centres of 4.375 inches. The timing gears were at the back, lengthening the crankshaft by an eighth bearing. The interesting point about the engine, J3, was that it showed how not to increase the power and torque from an engine of 3_ x 4_ inches. Its critical speed, in spite of 2_-inch diameter journals and 2_-inch diameter pins, was so much lower that even the benefit of a higher axle ratio to give the same torque at the rear wheels was more than offset. After a few experiments with centrifugally loaded crank dampers in an attempt to give not too much damping for the six per rev period and enough to silence the one at three per rev, the engine was abandoned and every effort was re-concentrated on 4.150-inch centres.

ROLLS-ROYCE WRAITH (4.257 litres)

When the 25/30 Rolls-Royce car was replaced in 1937 by the Wraith, the 3_-inch bore engine underwent some changes in design in the interest of simplification. The five gear drive at the front end became a three gear drive, the water pump was moved to the front and the distributor to the other side of the engine. Belts were still used only for the fan drive. A yet stiffer crankshaft, having 2.500-inch diameter journals and 2.000-inch diameter pins, was fitted.

I have not so far mentioned induction systems. In a push rod engine, space has to be found in the cylinder head for push rods, their clearance due to non-linear motion, and the metal casting round them. In our case 6 inches out of a total length of 21_ inches were devoted to the push-rods. The inlet and exhaust ports could have what was left. The arrangement used until 1939 started with a head having four inlet ports and three exhaust ports all on the push-rod side of the engine. The engines of the Rolls-Royce cars used this arrangement the whole of the time. On the 3- and 3_-inch bore engines the induction tract passed through the centre of the cylinder block to a side-draught Rolls-Royce carburettor on the other side, some induction heating coming from this tract and some from the

siamezed induction and exhaust pipes at the centre of the engine. On the 3_-inch bore 25/30 hp engine a down-draught Zenith carburettor appeared on the starboard side and, being over the exhaust pipe, was not without its troubles.

To have all the ports and push rods on one side of the engine was not the best arrangement for power. Engines used in the Bentley cars had the induction system on the non-push-rod side, deriving an immediate gain in breathing. Bentley drivers could be expected to use their gearboxes and high m.e.p. at 500 rev/min was therefore less important. A further departure from Rolls-Royce practice, allowable in the case of the Bentley, was to install S.U. carburettors. By choosing the best size of connecting passage between the two halves of the induction pipe, ram effect increased the m.e.p. over quite a large range of middle speeds.

Before going on to the first radical change in the engines tested by good fortune during the 1939-45 war, I would like to refer to some of the niceties of design which take into account how an engine is used. The engines described in this history have all been fitted at the front of orthodox cars having rear wheel drive. Apart from all the modern devices such as power steering pumps, refrigeration compressors, and even independent front suspension, which have made things more difficult, the engine has always had to share the bonnet compartment with the steering column, the pedals and the exhaust manifold. The latter three are rather uncompromising companions.

In 1922 the driver was by far the most important person in a car and Rolls-Royce therefore put the hot exhaust system on the near or left-hand side. The induction pipe seems to have shared this side for 'hot-spot' reasons. At the top of the steering wheel were controls for the hand throttle, the ignition advance and the mixture. Their messages reached the underbonnet compartment by concentric tubes passing through the steering mechanism. A Rolls-Royce job of the subsequent levers, rods and ball-ends could be made only if the carburettor and ignition distributor were on the steering side. These two considerations accounted for the five-gear drive in the wheel case.

AFTER THE 1939-45 WAR

'B' range of engines

Throughout the years 1922-1939 one problem never receded and, if anything, became more menacing. Between the inlet and exhaust valve of each cylinder was a narrow bridge of either iron or aluminium. As the ratio of valve diameter to bore size grew greater, so the bridge grew narrower; finally the foundry said that cooling of this bridge could no longer be guaranteed. Not wanting to tackle the noise of an overhead camshaft engine, a decision was made in mid-1938 to design an engine with an overhead inlet valve and side exhaust valve (Fig. 16). Such a configuration had already been designed, made and sold in very small numbers in 1903. It appeared again some twenty years later on the 3.9 litre Bentley, the last car made by the original company. There was now no limit to the size of the inlet valve, only the mechanical difficulty of its operation. Remembering the smoothness of the iron engine experiment in 1932, the block and crankcase were made integral, the exhaust valve seating directly on to the iron surface. The gear compartment shrank to two gears, a steel crank pinion without spring drive and a resin-bonded fabric cam wheel. Belts now drove the dynamo and water pump as well as the fan. The cylinder centres remained 4.150 inches but the big ends became narrower and the crank webs thicker to raise the critical speed of the crankshaft to 5400 rev/min. Journals were now 2.750-inch diameter and pins 2.000-inch diameter. Six balance weights, all of the same size, appeared opposite the crankpins on webs 2, 4, 6, 7, 9 and 11 (Fig. 17).

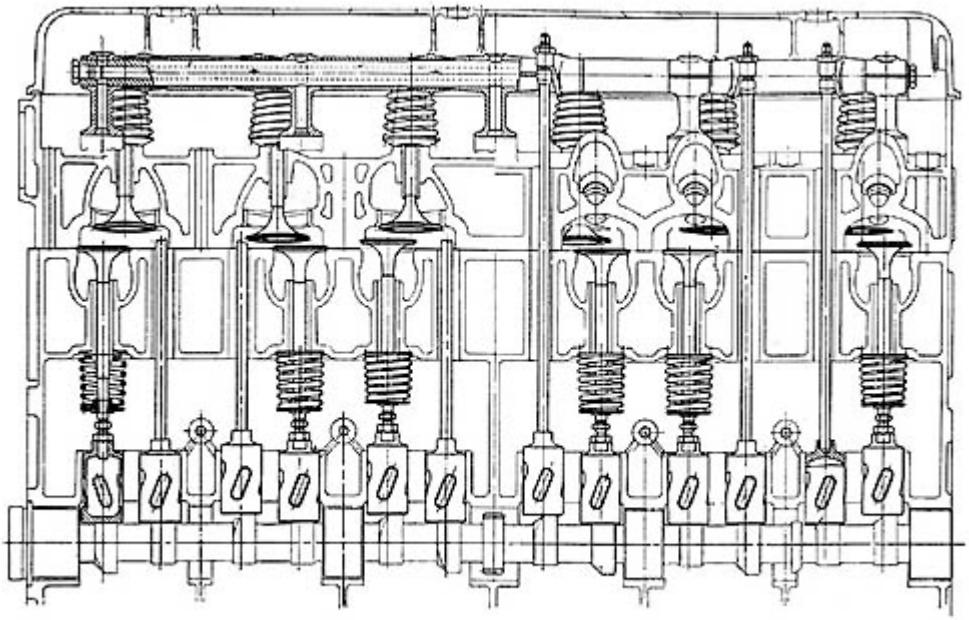

Fig. 16. Longitudinal section B.60 engine

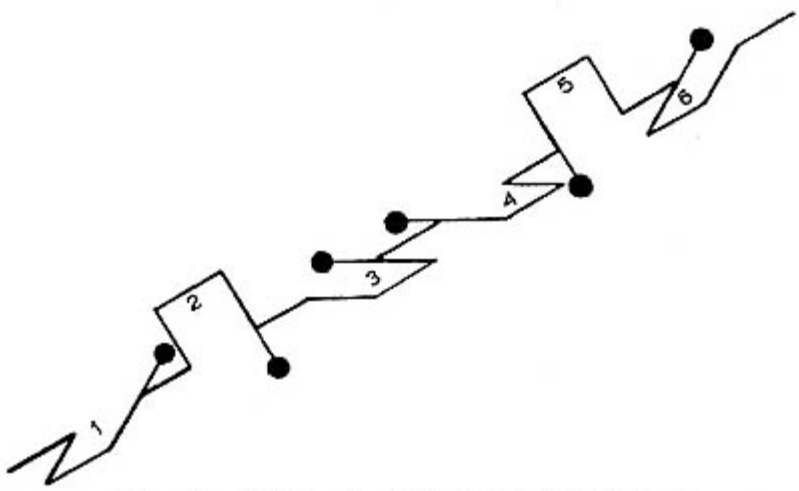

Fig. 17. B.60—six-balance-weight system

In addition to this new six-cylinder engine it had been decided to make a four cylinder and a straight eight, either leaving off the end cylinders or adding a further one at each end still 4.150 inches away (Fig. 18). The war prevented any immediate sale of these engines, but an immense mileage was piled up in vehicles run as staff cars or converted to lorries. During the war the quality of plain bearings and poppet valves went forward enormously, all of which could be incorporated in the new iron engines. By 1946 French testing of cars had taken a new turn, at least 100 000 miles being required to make it necessary to look inside the engine.

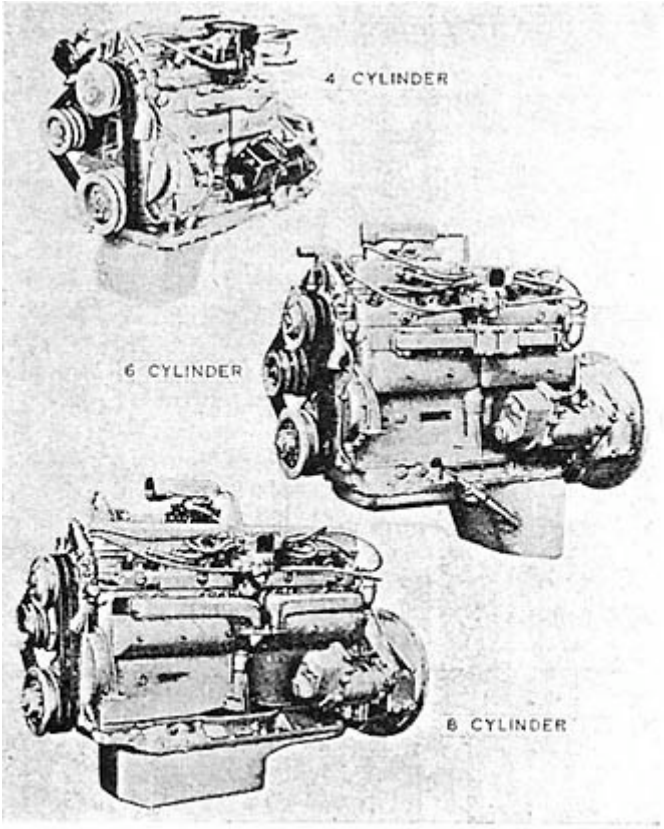

Fig. 18. B.40, B.60 and B.80 engines

Wars usually make one change one's policy and in a direction to counter monetary inflation. A possible successor to the Phantom III car, using the straight eight, was never made in large numbers but was limited to 12 for royal persons and rulers of states, and production began on a Rolls-Royce Silver Wraith and Bentley Mk. VI, both using a 3_-inch bore six cylinder iron engine of 6.4:1 compression ratio. The difference between the two engines now amounted only to camshaft and carburettor.

Both engines had a four-port induction system, the Rolls-Royce engine breathing through a dual-choke down-draught Stromberg carburettor and the Bentley through two 1_-inch S.U. carburettors. A spring drive, exactly as in the pre-war engines, was added to deal with cam gear rattles. The cylinder head was of aluminium to save weight, flat tappets of cast iron ran on a carburized camshaft and exhaust valves were again made of KE 965. The top 2_-inches of the cylinder bores were chromium plated. Water space between each cylinder bore provided a good foundry location for the cylinder barrels. A by-pass oil filter kept the oil looking remarkably clean and proved to be a ‘wolf in sheep’s clothing’.

The combustion chamber of an overhead-inlet side-exhaust valve engine can have a large variety of shapes. As long combustion chambers were condemned in all text books the exhaust valve was placed as near the cylinder bore as was considered reasonable for a certainty of water space between the exhaust port and the cylinder bore. Satisfied with the power of the early post-war engines, small changes were made to the first design of cylinder head in order to select the one that caused the least gas torque roughness, the shape shown in Fig. 19 being chosen.

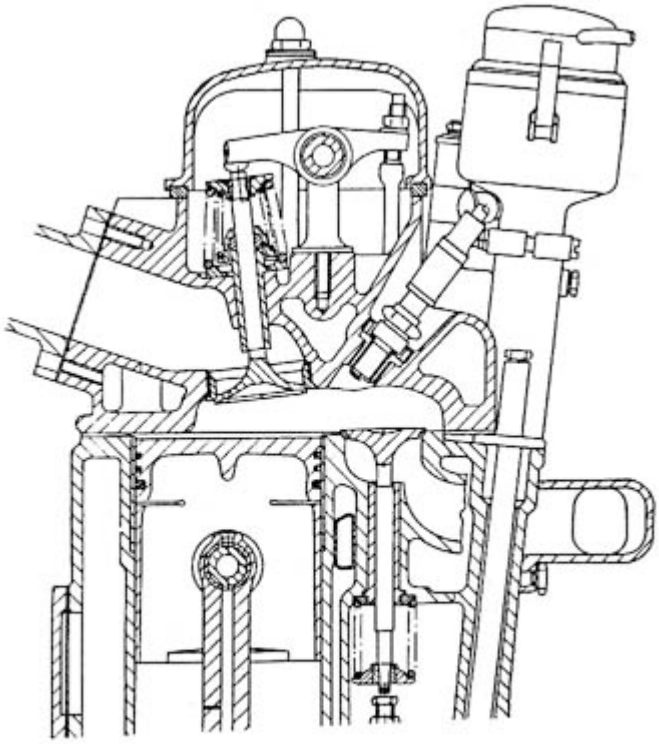

Fig. 19. B.60 cylinder head: 6·4:1 compression ratio, 3·500-inch bore

Tappet adjustment had ceased to be a maintenance worry. The exhaust tappet adjustment low down on the side of the engine was far from accessible, but the clearance never varied.

Engines proved exceptionally reliable, although a few big-end failures, due to dirt which had not been caught in the by-pass oil filter, pointed to the need for something even better. Nitrided shafts and lead-bronze bearings last for ever if fed with clean oil, but the combination is much less tolerant of dirt than the pre-war materials. In customers' hands the chromium part of the cylinder bore, about 0.0015 inch thick, lasted some 40000 miles, after which bore wear shot up to 0.001 to 0.002 inch per 1000 miles. Re-chromium plating a block was a

costly business, the whole engine having to be dismantled and all studs and gallery pipes removed from their casting.

Army combat vehicles

Quite soon after the war the War Office decided to have new vehicles for both general and combat use. For the latter they needed petrol engines of 70, 110 and 150 hp. The full 'B" Range of four-, six- and eight-cylinder Rolls-Royce engines exactly met this requirement and their basic components were of known reliability. Screened ignition and the ability to run submerged were quickly contrived. Most of the spares that would be used away from base workshop were common to all the engines. A large full-flow oil filter completed the specification. At 6.4:l compression ratio the engines would operate on 70 octane (motor) fuel. The choice for the new combat vehicles was made.

A step into the unknown

As before, cars became heavier and more torque was required. The cylinder head proved remarkably resistant to a higher compression ratio achieved in the old way of machining metal off the face. A 7:1 compression ratio gave a little more torque, no more power and a huge increase in roughness; an unsatisfactory combination. Possibly the bores could be squeezed up to 3_-inch diameter and this would mean no water between the bores. The precedents for such a step were Perkins oil engines and the Hudson car, one of which had the extra thermal problem of a side exhaust valve. Chromium plating of the bores was given up and a short pressed-in unflanged liner of 30 per cent chromium content, 0.062-inch thick, was used instead. Running-in of engines became troublesome, a chlorinated oil proving necessary, while piston ring treatment varied from phosphate to tinning. Piston seizure on development tests continued for nearly two years, until a shape of skirt and a crown ovality were found which combined quietness with reliability. The top land, hitherto circular, was now 0.018 inch smaller along the gudgeon pin axis. A force feed of lubrication to the little ends had been used since 1919 and a gudgeon pin diameter of 0.750 inch still sufficed. To achieve freedom from noise the gudgeon pin fit in the yellow metal bush of the connecting rod had to be described as 'not to fall out under its own weight, but such that the whole rod would just rotate under its own weight from a horizontal position'. The clearance was between 0.0001 and 0.0002 inch. A small reduction in engine roughness was achieved by thickening the end crankshaft webs at the expense of journal length. The increase in engine capacity of 7 per cent gave, of course, rather more than 7 per cent increase in

acceleration. The change proved well worth the hard work to achieve it. Piston seizures were not the only difficulty resulting from the absence of water between the cylinder barrels; the foundry found that the location of the barrels was more troublesome and that their sectional thickness varied more than before.

The compression volume had become larger, giving more scope in the shaping of the combustion chamber. A smoother engine had appeared, giving more than the expected increase in power. The reason was not immediately seen and several years went by before advantage was taken of this knowledge. It was then 1950. The first post-war cars were mounting in mileage, some having reached nearly 90 000 miles. Mysterious failures of cam wheels started to occur, and always in France. Fabric had proved to have a finite life with rather a large scatter, t he end being accelerated by higher than normal oil temperatures, always an adjunct of Routes Nationales.

Development engineers were faced with the problem of how to assess the value of a change where time and temperature, as well as load, played their part. A rig in which the cam wheel drove a flywheel through a Hooke's joint running at an angle did not, we thought, indicate more than one source of improvement. A soft material was preferred for its silence, but aluminium was finally chosen because its cold failure strength could be quickly assessed and it would not be subject to unpredictable time and temperature effects. The inertia of aluminium, suitably shaped, was less than the fabric. A smaller inclination to rattle offset the extra cold pitch line clearance required to counteract the relative expansion with the crankcase as the engine warmed up.
Parallel with motor car development further work on the War Office engines continued. Full flow oil filtration had been a great success. Most troubles were due to an installation fault difficult to avoid in advance in every one of the multitudinous uses to which the engines were being put. As greater numbers of engines were soon to be ordered a redesign solely for simplification of machining was carried out, over 100 000 engines subsequently being made. It was decided that the cylinder heads should be of cast iron. A comparison with identical heads in aluminium showed no compression ratio advantage for the latter.

A perpetual difficulty in the manufacture of an engine is removing all loose sand from the casting and cleaning the cored or drilled oil ways. Examination of bearings after running-in always showed some dirt trapped in the lead-bronze

shells. On the car engines the oil passage to the main bearings fortunately came near to the surface of the casting in a most convenient place. A full flow filter for bearing oil only was coupled up for all test bed running. Soon afterwards the filter, quite small in size, remained a permanent feature of the engine.

In accordance with the current American practice, immediate post-war engines aimed at a gentle tappet rotation caused by a reduction in cam width at full lift. It is true that most tappets did rotate but the direction of rotation was frequently counter to that of the theory behind the shape of the cam. It seems more likely that tappet rotation is caused by an epicyclic effect of the tappet in its bore. The direction would depend on push-rod angularity and the vector effect of several frictional forces.

3_-inch diameter bores

Without any apparent effort engines become more reliable the longer a basic design stays in use. Why not therefore increase the bore size a little further? It seemed that a reasonable gasket could be made if the bores grew to 3_-inch diameter. There would still be 0.4 inch of metal between adjacent pistons, 0.275 inch of casting and twice 0.062 inch of liner. Gas torque roughness again decreased and the gain in power was more than expected.

The introduction to the public of 3_-inch bores (4.9 litres) coincided with an option to have an automatic transmission. Early experimental samples of cars so arranged accentuated a roughness at 3300 rev/min which for a long time had been gently in the background. Suspicion soon rested on the flywheel, which now had a rather flexible extra bearing in the gearbox. It was soon discovered that 3300 was the natural frequency in bending of the engine-clutch housing-gearbox unit. The exciting force was radial run out of the flywheel, which can never be zero because of bearing clearance. A slight stiffening of the clutch housing raising its frequency only a few hundred rev/min removed the sensation of roughness from the passengers. Although difficult to explain, this phenomenon often occurs when trying to eliminate an unpleasant vibration. The most likely explanation is that objectionable roughnesses are due to two resonances coinciding; it is only necessary to alter one of them. It is very probable that the flywheel vibrations which had caused so much trouble in the early thirties were due to the flywheel's own resonance coinciding with the bending of the engine structure.

When one tackles a particular roughness one usually becomes aware of some others of lesser magnitude. The issue is frequently confused. In our case, at about 2900 engine rev/min, elusive vibration also occurred. This time it was of higher frequency and was measured to be 8700 per minute, or three times per revolution. A brief investigation showed that the starter motor and the induction system had natural frequencies of about 8700 per minute with slight variation due to differences in casting thickness.

This might be a good moment to mention crankshaft balance. Every crankshaft up to then had been machined all over and it seemed fair to assume that static balancing on two knife edges was all that was required. Nitrided crankshafts are always bowed, a maximum figure of 0.012 clock reading being acceptable. A crankshaft which is balanced when bowed either statically or dynamically will be out of balance when it is straightened by crankcase bearings. A first approximation to allow for the bow is to move the knife edges or dynamic supports in from the end journals. If the bow is truly circular there is a position for the knife edges which fortunately falls on journals 2 and 6, which is very nearly right. For some years this simple procedure was adopted (Fig. 20).

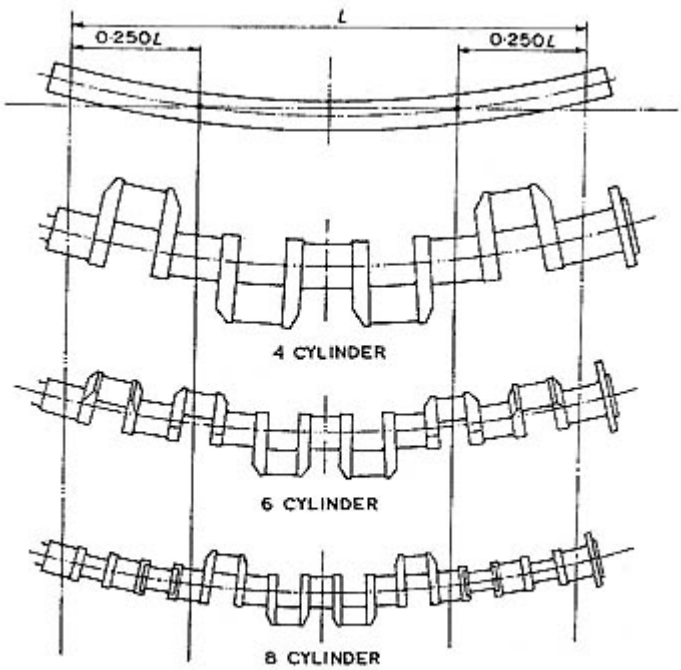

Fig. 20. Crankshaft bending

Softer engine mountings and more critical testing soon made even greater accuracy desirable. A dynamic balancer was installed which included a centre

bearing for the crankshaft. Although bow was taken care of and great accuracy was available, the result was not good enough. The flywheel was attached to the crankshaft during the balancing operation and the fluid part was filled with oil; the effect of eccentric flywheel mounting had been corrected but still some vibration remained. If road wheels and tyres needed couple balance perhaps the flywheel needed it even more. This proved to be the case. Each fluid flywheel assembly was balanced in two planes only a few inches apart before being attached to the crankshaft. This series of operations has been used ever since and seems to account for all the forces which can be eliminated by external addition or subtraction.

Major Carter pointed out many years ago how lucky it was that certain possible resonances were sufficiently outside the usable speed range. The tensile pendulum of the piston stretching the connecting rod has a frequency of about 100 000 per minute, but the torsional frequency could be only two or three times the maximum speed of the engine. In the case of a six-cylinder engine, excitation by the torsional oscillations of the crankshaft might easily excite unwanted motion of the pistons and may in fact have been responsible for broken piston ring stops when these were in vogue.

A much more difficult calculation concerns the possible resonance of an individual crankshaft throw restrained by its own stiffness and that of the crankcase. A figure of the same order as that of the piston resonance seems likely.

Many years ago I was able to watch a six-cylinder engine being motored over without its cylinder head. At high speed all the pistons appeared to be stationary at top dead centre, but occasionally to alter their height or to rotate a little; possibly this was due to proximity to an unwanted resonance.

By 1955 more power and more torque were required to engine a new body which had less drag and could be expected to go faster. When the maximum speed of a car is raised either a higher axle ratio is required or the engine must run faster, or, more likely, a compromise involving both will be chosen. The short cylinder liners had for a few years been accompanied in batches of engines by a longer liner in the lower part of the bores. Porosity at the foundry had been an ever present problem. A change to a full length liner seemed the obvious answer. A high-phosphorus iron and a chromium-plated top ring were known to be an

excellent combination for bore wear and solved all running-in difficulties. Unfortunately it did not seem reasonable to ask the foundry to do with less than 0.275 inch of casting between cylinder bores. Without liners the cylinder size could have been increased from 3.750 to 3.875 inches, but the foundry scrap would have been excessive. The limit of bore size at 3.750 inches had been reached while 4.150 inches separated the centres. Incidentally a wet-liner engine cannot emulate this use of space nor, as far as I know, can any other construction.

At last the increase in engine output had to be achieved by skill rather than by strength. A six-port cylinder head and slightly higher compression ratio (6.6:1) met the immediate need. The six balance weights on the crankshaft were replaced by four in the position invented by Mr L. H. Dawtrey in 1934. The weights appeared on webs 2, 6, 7 and 11, and could now be forged integrally with the crankshaft. The middle weights were exactly opposite the crankpins, the end ones finding themselves in a rather inexplicable position except to provide static balance (Fig. 21).

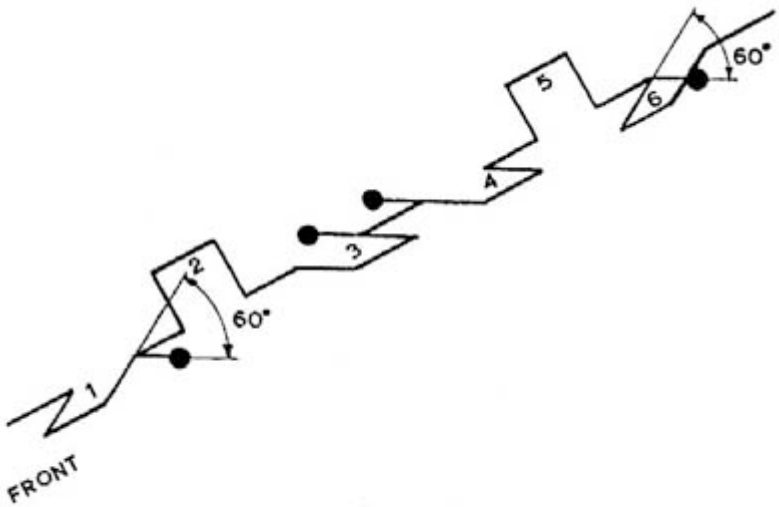

Fig. 21. Dawtrey balance weight system

This four-weight arrangement, which has proved most successful, is certainly not what the mathematician would choose. The inherent hogging couple of a six throw crankshaft would be countered by four weights on webs 1, 6, 7 and 12, each 30º away from opposite its crankpin. By the Packard method, taking into consideration differences in stiffness of the crankshaft in different planes, one arrives at about 20º from opposite the end crankpins. The drop forger won the day and Mr Dawtrey's arrangement will live a long time.

I said earlier on that the 'F' head engine seemed very unwilling to accept a higher compression ratio, without much effect other than an increase in engine roughness. Each increase in bore size had given more than the expected result. This could be due to some side effect of the increase in compression volume. What exactly causes combustion roughness is still a mystery, but the 'F' head disliked a smaller throat area for the outgoing gases. The combustion space throughout the years developed as shown in Fig. 22, the throat area being no smaller, although the compression ratio had reached 8:1. An enormous inlet valve of 2.150-inch diameter completed the picture, the engine giving 178 hp and 135 maximum m.e.p. when production of the motor car six-cylinder engine stopped in 1959, compared to 51 hp and 89 m.e.p. in 1922 and 132 hp and 122 m.e.p. in 1946 (Fig. 23).

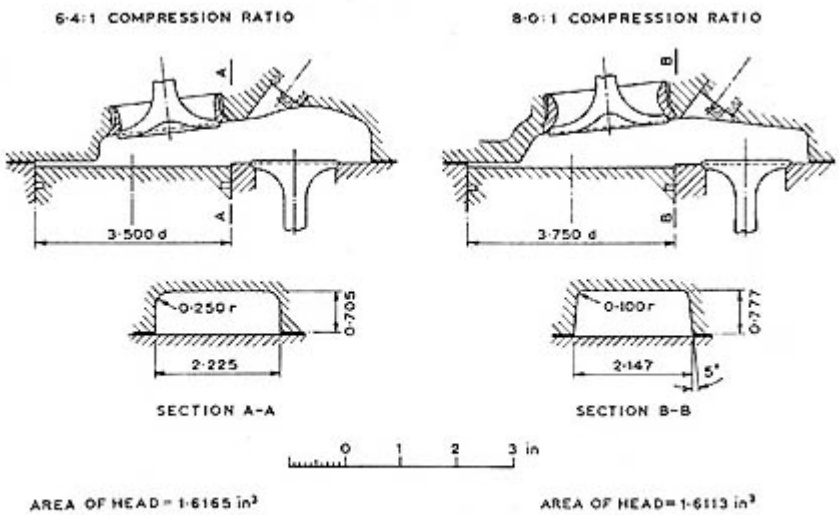

Fig. 22. B.60 combustion spaces compared

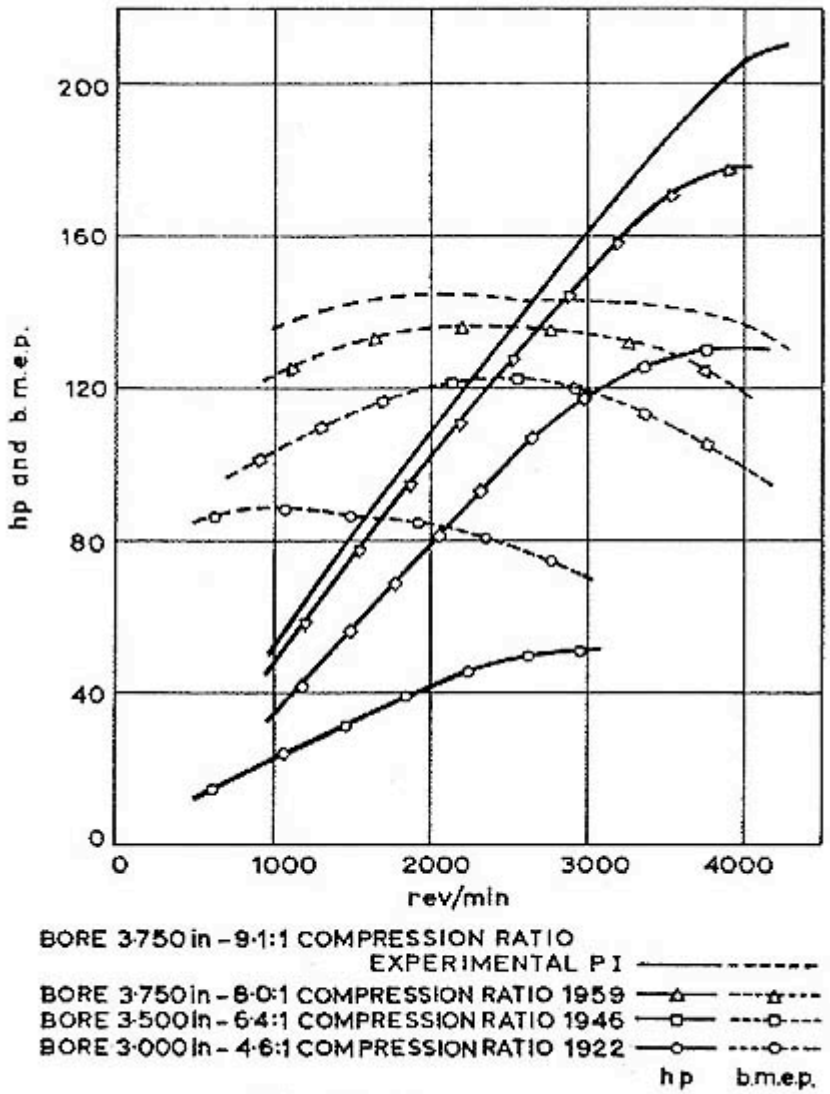

Fig. 23. Power curves

The reliability at this final power was always being improved because of the military parallel development, mostly on the straight eight engine which had also been bored out to 3.750 inches. This engine was known as the B81 and one particular requirement was a continuous run at maximum power of 168 hours. No stop of any kind could be tolerated in spite of fuel containing 3.6 cc lead per gallon. Brightray exhaust valves and inserted exhaust valve seats were required in addition to considerable development of the pistons before a week's continuous running could be achieved. On lead-free fuel the same combination of pieces would run for 700 hours, this, regrettably, being only of academic interest.

An opportunity now arose to fit a B81 engine in a small track-laying vehicle for the West German Army. At least 235 hp was specified and this entailed an eight-

port cylinder head and a very large dual downdraught carburettor, the whole engine having to run under water. The engine now found itself in an unusually hot compartment, the cooling system having three inter-coolers in series with the radiator.

The Germans expect the worst to happen and, although the cooling system was pressurized to 10 lb/in^2, insisted on a test of 100 hours at maximum power with the coolant outlet at 100^{0}C unpressurized. Twenty-two hundred hours of development running on test beds were needed before the Bundeswehr could be told that a feat never before performed in the history of automotive engineering had been accomplished. The feat was satisfactorily repeated at Aachen on three engines chosen at random in Germany.
Before the demand that the engine should run boiling but unpressurized, gasket failures and stretch of inlet valves were occurring everywhere except at Crewe. Failures were reported from prototype vehicles, and every attempt to run a type test in Germany with coolant at a mere 80^{0}C was unsuccessful. The knowledge that about forty type tests had been successful at the factory was comforting but apparently not helpful. How true it is that one designs engines to survive a gruelling on a particular test bed without realizing the tens of years of improvement to test beds which has unwittingly gone on all the time.

An entire vehicle was coupled to a dynamometer, the cooling-fan noise being audible for miles, and failure now took place under the noses of the development engineers. It is the lot of such people usually to have to diagnose the cause of a failure from the tangled remains and they consider themselves very lucky ever to see by accident the start of a trouble. Pre-ignition seemed the most probable culprit; auto-ignition was demonstrated by removing a plug lead after some fifty hours' running of a new engine or a new cylinder head. Thermocouples were daintily inserted as near as possible to the surface of the combustion space near to the sparking plug. They read almost uniformly in all eight cylinders at 175^{0}C. But after 40 or so hours' running they started to rise, and soon reached 350^{0}C. On removing a cylinder head a small trace of oil was noticed in the coolant. Cleaning the water passages of the head with detergent brought the temperatures back to normal. The heat exchangers in the coolant were rightly suspected. Although a type test under vehicle conditions was not possible, victory was short-lived.

Engines still would not run on a test bed at Aachen, almost identical failures occurring when the coolant was not contaminated. It was really this difference between Aachen and Crewe that created the unusual demand that the engines must run boiling. On the Aachen test beds steam was shown to form in the cylinder head when the measured coolant outlet temperature was 80^0C. Fortunately the test at 100^0C had to be done with a vehicle installation and development of a German test bed was side-stepped.

The engine was mounted back to front in the vehicle, the radiator being alongside and very little higher. A book could be written about the day and night work which followed. Suffice it to say that by bleeding off one gallon a minute of the coolant pump flow of thirty gallons a minute (all of which normally entered the gallery beneath the exhaust valves) and sending this one gallon directly into the cylinder head; by moving the engine outlet to the rear end; by obtaining reliable heat exchangers and, lastly, by altering the coolant system so that the make-up water was fed to a Venturi just before the pump inlet, putting an end to aeration on any gradient, 170 hours at maximum power could be repeated at will. Double this figure was reached by stelliting the inlet valves, a change that was arrived at after pouring oil into half the carburettor supplying four of the cylinders.

Until every improvement was included success was not achieved and only later was it discovered that at Aachen a restriction in the test bed coolant system had halved the flow and that the engine thermostat had been removed, thereby throwing to the winds a valuable 5 lb/in^2 pressure with its higher boiling point. A little moral that can be drawn from this story is always to put the recording thermometer at the hottest part of a cylinder head, a practice which had been forgotten since 1937.

A final attempt for power

While some strive to overcome troubles, others are looking to the future. What could be reached using the now available 100 octane fuel? A six-cylinder head of 10:1 compression ratio produced 205 hp with two carburettors and 215 hp with petrol injection. The eight-cylinder engine reached 275 hp with petrol injection and 268 hp with three S.U. carburettors on 80 octane (motor) fuel. These figures may not be startling by racing or even sports standards, but their progress has always been constrained by an ability to idle smoothly at 400 rev/min and a desire for the maximum possible torque at 1000 rev/min; the latter remained

essential even with an automatic transmission. When it was first decided to fit two separate carburettors on a Rolls-Royce car there was some concern about the possibility of a reliable tick-over. The problem was as usual tackled by an appreciation of the niceties of the mechanics involved. The carburettors would get further apart as the engine warmed up and their throttle spindles would not be exactly in line. An accurate relative adjustment was required between them. This adjustable coupling would inevitably have either slack or flexibility or both. An initial approach was to have slack in the two intervening couplings, each carburettor having its own throttle stop. With separate throttle springs this provides a consistent tick-over, but a poor and inconsistent behaviour at very small throttle openings. A better arrangement, used for some years, employed a single throttle stop on one of the carburettors, the spring and operating lever being at the extreme other end of the spindle assembly. Both universals now always remained wound up in one direction. Couplings with slack became outmoded and a steel plate with endwise flexibility replaced them. The best arrangement now was to have once again a stop on only one carburettor, the operating lever and the spring being as near to it as possible. Finally, an increase in radius of the throttle stop from the rather usual 1 inch to about 3 inches made a 'Rolls-Royce job'.

So ended the development of engines having 4.150 cylinder centres, 4_ inches stroke and a gudgeon pin of only 0.750-inch diameter (Figs 24, 25, 26 and 27).

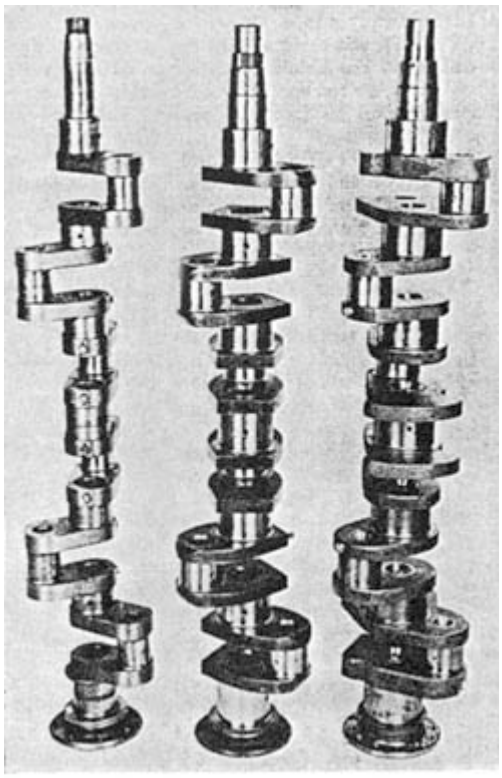

Fig. 24. Crankshafts: year 1922, 1937, 1959

F

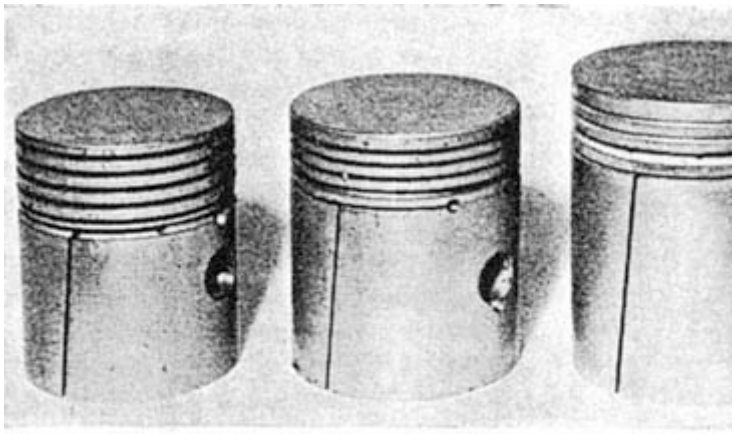

Fig. 25. Pistons: *year* *1922*
bore, inches diameter *3·000*

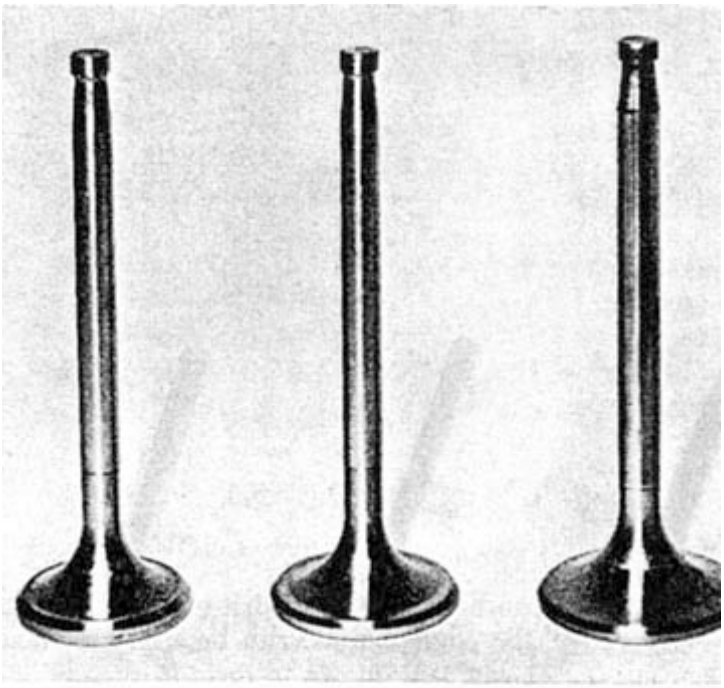

Fig. 27. Inlet valves: *year* *192*
diameter, inches *1·32*
bore, inches diameter *3·00*

An experiment in size and weight

In 1947, with a view to a long term future, an eight cylinder 'B' range engine was cast in aluminium and was equipped with dry liners of 3.750-inch bore diameter. With three carburettors this engine ran for some years in a long-nosed Bentley, giving considerable enjoyment to the driver but never seeing the production light of day. The War Office, hearing of this car, ordered for test some six-cylinder B60 engines (3.500-inch bore) of similar construction. This project was dropped except that one of the engines found its way into an experimental car.

About 1952 a chance remark in America suggested that these aluminium engines would work just as well if the dry liners were removed. An old War Office engine was extracted from the store, the liners were removed and 3_-inch pistons were fitted at their usual running clearance. This engine survived a test-bed gruelling and a year or so in a car and then, like its predecessors, was forgotten.

Also just after the war some engines had been made of 2.875-inch bore and 3.125-inch stroke, again using dry liners in an aluminium crankcase. Considerable knowledge existed of dry-liner engines and only the opportunity to use it seemed lacking.

A projected special military vehicle, which unfortunately did not materialize, needed a lighter engine of less overall height. It seemed plausible to suggest that a B61 of shorter stroke and of all-aluminium construction would fulfil the requirements. In 1949 a stroke of 3.9 inches had been tried as an exercise in smoothness, but one of 3.6 inches was necessary to meet the installation limitations. This figure would also enable some current V8 parts to be used.

An experimental engine was made using 3_-inch diameter pistons running in dry liners and a 2.15-inch diameter inlet valve. The side exhaust valve in an aluminium block had not in the past given trouble, although some new thermal problems could be expected. The cylinder centres remained unaltered at 4.150 inches.

The design of the cylinder head showed how a compression ratio of 11:1 could be obtained in spite of the shorter stroke and it was argued that a reduction in stroke in the ratio of 5:4 could be countered by running the engine 5/4 times faster. An experimental engine of 7.8:1 compression ratio made mostly from existing pieces proved the truth of this prediction, 190 hp being obtained after a small amount of work on the induction system.

CONCLUSION

An organization which makes entire engines does not make, design or develop many of the constituent or attendant pieces. It considers itself fortunate when extramural engineering keeps pace with internal requirement. The extramural engineering is shared by other engine makers and only some outstanding and novel departure from the orthodox would leave it behind or find it wanting. Throughout the forty years of this history, fuels, lubricants and metallurgy have kept pace with m.e.p.'s and rev/min. This single sentence can be written because thousands of people have spent millions of pounds making it so. Only Young's modulus has resisted change and one can merely dream of what one would do if it were doubled.

APPENDIX I

$$a = 1{\cdot}500;\ b = 0{\cdot}500;\ h = 0{\cdot}775;\ r = 2{\cdot}250;\ w = 2{\cdot}200 \text{ in}$$
$$d_1 = 2{\cdot}000;\ \delta_1 = 1{\cdot}250 \text{ in}$$
$$d_2 = 1{\cdot}500;\ \delta_2 = 0{\cdot}750 \text{ in}$$

By Carter formula, if 'l' is the equivalent length per throw,

$$l = (2b+0{\cdot}8h)+\tfrac{3}{4}\left(\frac{d_1^4-\delta_1^4}{d_2^4-\delta_2^4}\right)a+\frac{3}{2}\left(\frac{d_1^4-\delta_1^4}{hw^3}\right)r$$

$$(d_1^4-\delta_1^4) = 13{\cdot}56$$
$$(d_2^4-\delta_2^4) = 4{\cdot}744$$

$$l = (1{\cdot}0+0{\cdot}8\times0{\cdot}775)+\tfrac{3}{4}\times1{\cdot}5+\frac{13{\cdot}56}{4{\cdot}744}+\frac{3}{2}\times2{\cdot}25\times\frac{13{\cdot}56}{0{\cdot}775\times2{\cdot}20^3}$$

$l = 10{\cdot}36$ in

If nose length = 2·200 in and tail length = 2·250 in, and extra width of centre bearing = 0·500 in

$$L = (2{\cdot}200+6\times10{\cdot}36+0{\cdot}500+2{\cdot}250) = \underline{67{\cdot}11} \text{ in}$$

$$S = \frac{CJ}{L} \quad \text{where} \quad C = 11{\cdot}8\times10^6 \text{ lb/in}^2 \quad \text{and} \quad J = \frac{\pi}{32}(d_1^4-\delta_1^4)$$

$$S = \frac{11{\cdot}8\times10^6\times1{\cdot}33}{67{\cdot}11\times12} = \underline{1{\cdot}95\times10^4} \text{ lb.ft/rad}$$

Crankshaft inertia

	lb/in²	
Journals	3·750	
Pins	18·000	
Webs	48·130	
Big ends of rods	23·180	
½ recip^e mass	27·800	
	120·860	≡ 0·0261 slugs/ft²

Inertia on nose

	lb/in²	
Small timing wheel	2·07	
¼ of large timing wheel	6·40	
Fan pulley and damper hub	37·00	
	45·47	≡ 0·0098 slugs/ft²

Flywheel inertia—0·69 slugs/ft²

If S = Stiffness of crankshaft in lb ft/rad

I_c = Nose inertia + ⅓ crankshaft distributed inertia

I_f = Flywheel inertia

$$\text{Then} \quad n = \frac{1}{2\pi}\sqrt{S\left(\frac{1}{I_f}+\frac{1}{I_c}\right)} \sim/\text{sec}$$
$$= \frac{1}{2\pi}\left[1{\cdot}95\times10^4\left(\frac{1}{0{\cdot}69}+\frac{1}{0{\cdot}0098+\frac{1}{3}\times0{\cdot}0261}\right)\right]^{\frac{1}{2}}$$
$$= 165 \sim/\text{sec}$$
$$= 9900 \sim/\text{min}$$

The third order will be at 3300 rev/min of the crankshaft.

APPENDIX II

BIBLIOGRAPHY

CARTER, B. C. 'An empirical formula for crankshaft stiffness in torsion', *Engineering* 13th July 1928.